Micro-multihull Design Display

Lightweight Yacht Construction Symposium

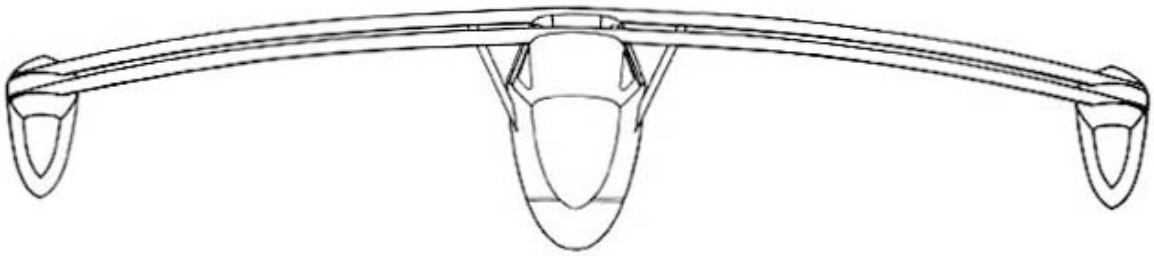

Young Given Tennant Hayes Rhodes Fuller Woods
Swinton Keogh Beale Evans Sedlmayer Talalc Mitchell
Baigent Duckworth Timms Palmer Honey Lock Miller
Schofield Barker de Thier Tapper

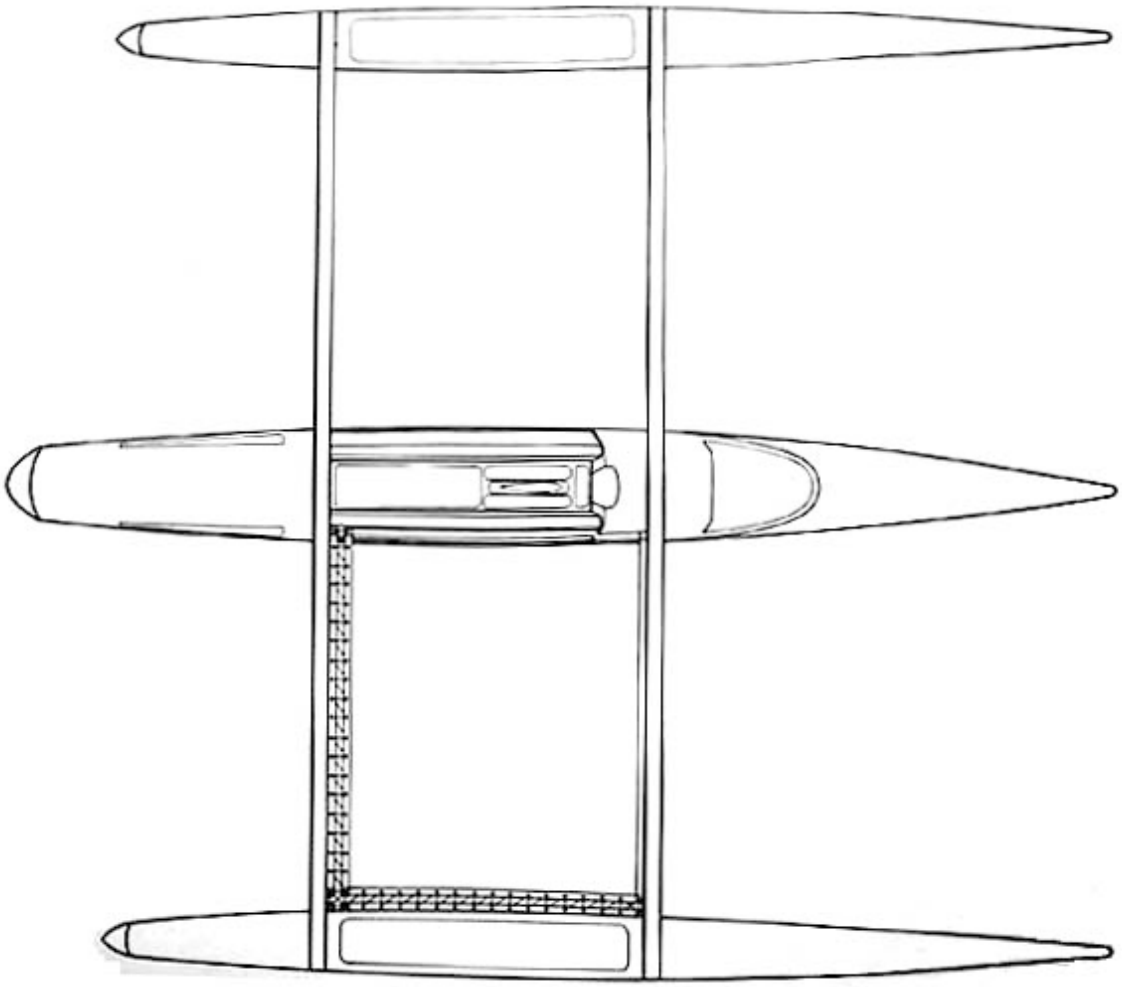

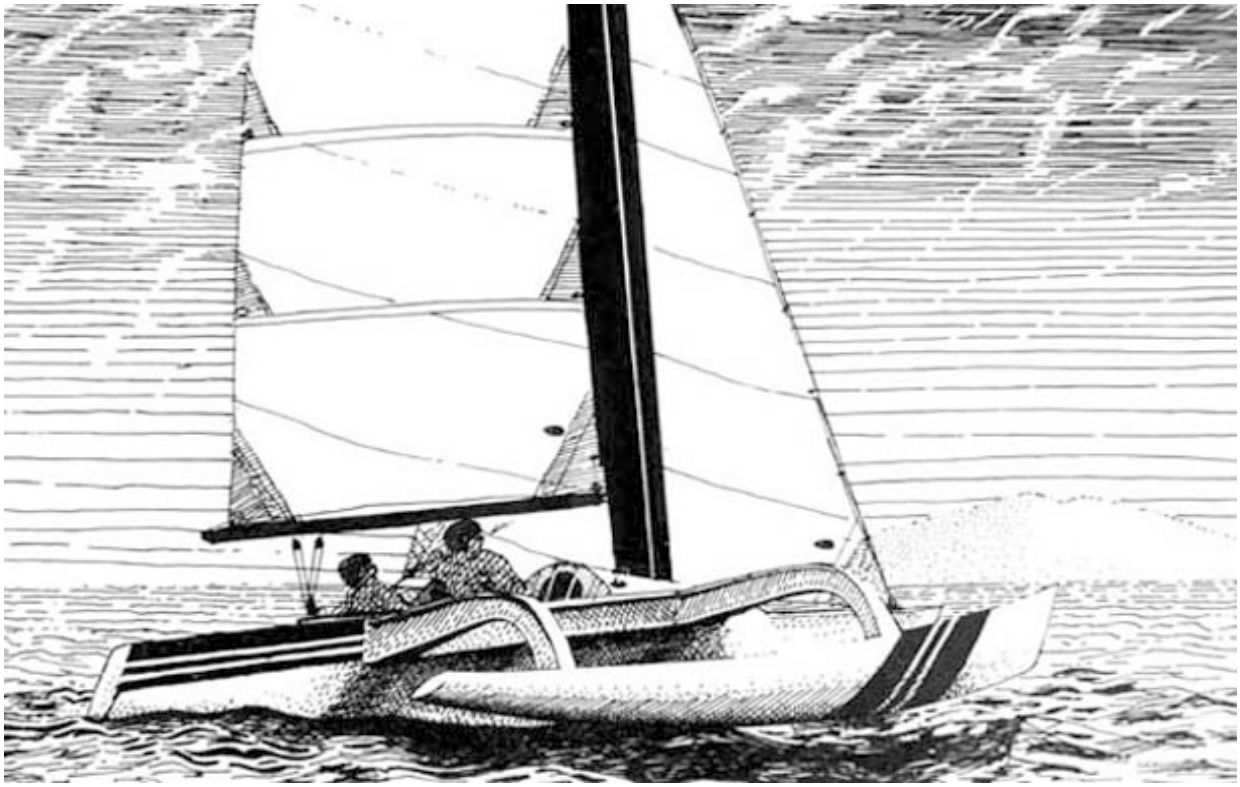

cover/inside: Mike Hayes Micro-multihull – above: Micro-multihull sketch – right: Richard Woods Gwahir

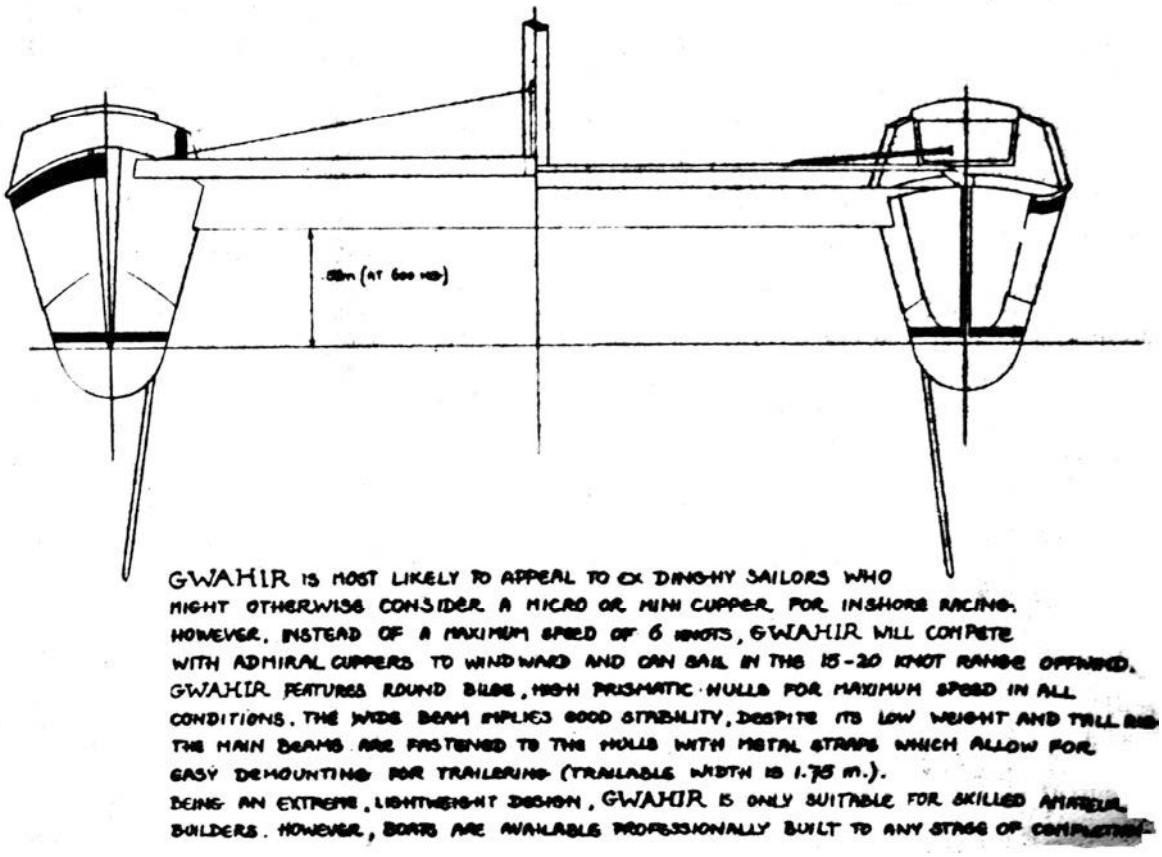

Micro-multihull Design Symposium

An introduction:

In the October 1982 issue of the UK magazine Multihull International, Richard Woods introduced his refreshing idea of a level rating, sporting and trailerable multihull.

The parameters for the boat were very simple: 25 feet overall, 24 foot waterline, unlimited beam, a Bruce Number of 2 for the empty boat, accommodation for three, minimum weight of 700 lbs. and a stability formula that enabled the yacht to carry full sail in Force 5.

This immediately brought forth a strong response not only in the UK but also from France, Holland, Denmark, Australia and New Zealand. Malcolm Tennant wrote from here endorsing the new class, pleased not only because he had a similar design to the Micro-multihull but because for some time the concept of a harbour racing level rater had been talked about in this part of the world also.

Here was a boat that was an affordable, performance craft that would possibly become the reason for the popular off the beach catamaran sailors to gravitate to, one that had similar or better performance to what they were used to and at the same time, provide a vehicle for small cat expertise to be introduced into the established Auckland multihull fleet.

Similar thinking and discussions must have occurred in other maritime areas and the written activity and debate published in Multihull International following the Micro-multihull introduction, was unprecedented in the specialist yachting magazine's history.

This avalanche of material must have surprised Woods and the UK MOCRA people as some of the self-styled expert advisors both in the UK and especially in Holland, were quite adamant that many aspects of the rule should be changed, invariably to each advisor's

fairly biased attitudes or, if they had a cruising boat of similar size, changing the rules so their design, outmoded and cruising boat heavy, would fit the rule exactly.

However, aside from these people who felt threatened by the Micro-multihull, the response from some of the world's leading designers such as Derek Kelsall and John Shuttleworth, was very positive; they asked for little or no change and wished the new class well.

But the noise and bluster must have overwhelmed Richard Woods as he wrote later that the Micro-multihull was really a design geared for UK conditions where formerly small, trailerable performance multihulls were few and relatively undeveloped. The international flavour he had idealistically sought with the Micro multihull's introduction, had been tempered somewhat; if the Dutch wanted many changes and differing classes, then he was not going to force his will upon them.

In New Zealand however the idea of international racing in level raters was one of the many attractions to the class, it appealed very much even though Antipodean designers in the past have chosen to go their own way with lightweight, dinghy-type monohulls when overseas rules threatened to outlaw them; hence the large numbers of Wednesday Night type racing boats built and raced here.

At the introductory discussion of the new design at Auckland Richmond Yacht Club in mid September where 21 designs were on display, Alf Locke from Healing Industries, compared the new class to that of Archie Logan's M Class when it arrived on the Waitemata in 1922. He felt it was in many ways similar, a fun, go fast Gulf cruiser/harbour racer that had the possibility of becoming just as popular as the older design.

Tennant, who got a head start on the other designers, drew a catamaran to the limit of the rule and by the time of the design show, had sold eight sets of plans overseas.

Ron Given said that the Micro-multihull rule was light years away from the hated IOMR which had failed to to become accepted here mainly because it was biased towards large, expensive, heavy cruising-type multihulls and which had heavily penalized any developmental designs.

At the discussion the Bruce Number was singled out to be the stroke of genius in the new rule for this halted any possibility of cheating with weights and sail areas.

However since the Bruce Number handled these areas very well it was felt that the minimum \weight of 700 lbs. and the stability formula, could quite easily be dropped.

The advantage of an ultra-light boat would be lessened by the correspondingly smaller sail area te boat would be forced to carry. On the point of stability, any boat that was unable to carry sail because of lack of beam, would automatically cancel itself out because of its poor performance, not to mention its lack of safety as well.

Bernard Rhodes said that, like his Klis design, (see above) there should be an attempt to get more crew aboard and suggested that four people should be a more realistic number. This was countered by people who thought it obnoxious for a 25 foot boat to be forced to carry this number of crew. Tennant reminded the forum that the considerably larger Great Barrier Express was invariably sailed by a crew of only two and he felt that three on a Micro-multihull was one too many. Colin Palmer from Adhesive Technologies saw the appeal of the level rater to be that of a racer 80% of those interested in the design and cruising aspects would be of lesser concern.

It was pointed out that for ten years efforts to involve cruiser oriented boats in the AMSA fleet had been unsuccessful and that the club had bent over backwards to encourage these boats to compete. It was generally accepted that cruisers had had their chance.
Leon Talaic further drove this point home by saying that formerly he had owned a popular cruising designed monohull that actually did have one design racing and even though his was the top boat, he always had trouble getting enough crew to race his boat. Since he had

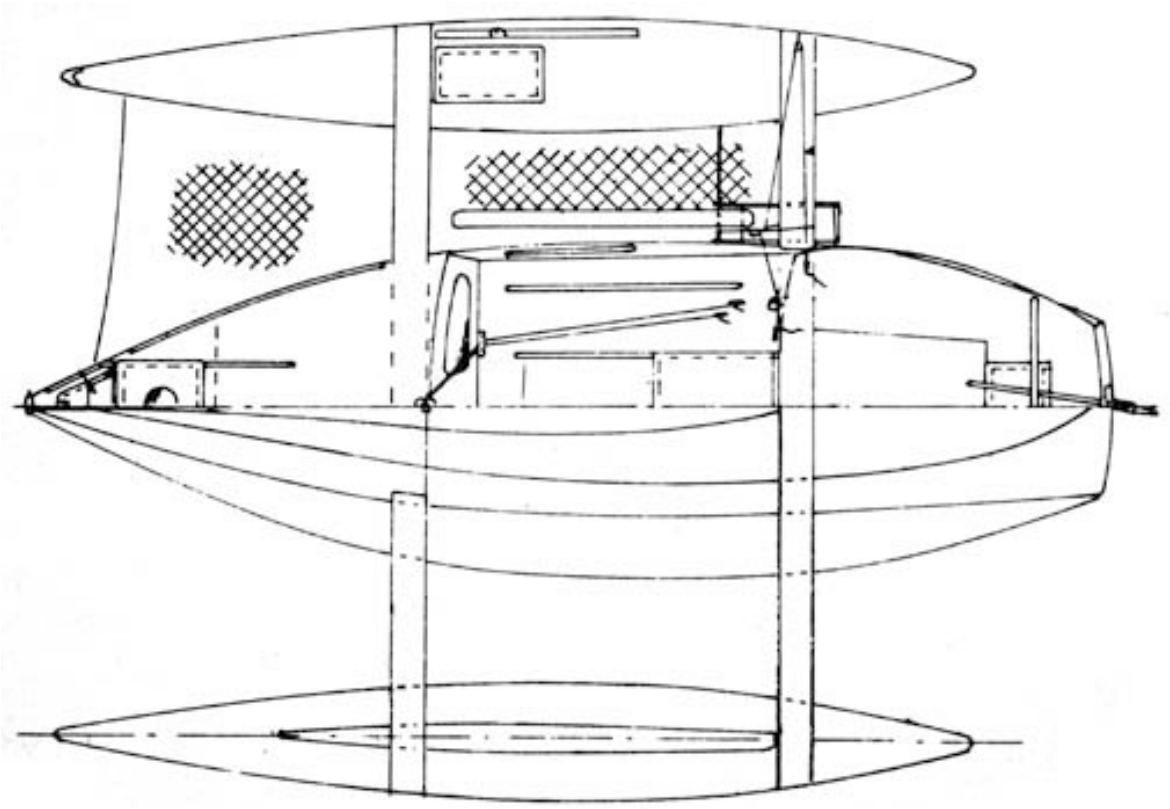

Bernard Rhodes design Klis

swapped this boat for a Ross 930 Gulf racer that to be competitive required a larger number of crew on the weather rail, he now had a crew waiting list as large as a football team.

Because these are primarily racing boats, Given wanted reacher and spinnakers to be quite large as the enjoyment of sailing these boats hard on reaches and runs would be reduced if the rule decided to reduce these areas too much.

Tennant had drawn a 66% reacher for Spyder (300 square feet) and this was set from a position a metre up from the hounds. The spinnaker was 160% making it a large sail but was one that he intended to only be set in light running conditions. In stronger winds the reacher would be more than sufficient if the boat was tacked Tornado-style downwind.

This brought forward a discussion on the merits of having a heavier boat carrying more sail versus the lightweight boat with less in similar sailing wind conditions, the results from which have yet to be proven in these waters.

Since Woods' own designed Gwahir catamaran Micro-multihull has recently beaten much larger boats in UK racing and also having observed the startling performances of similarly sized trimarans like Tennant's Demon Tricycle and Crowther's Gulf Chariot in Auckland, it is obvious that the Micro-multihull sized boats are going to be fast, and inevitably, because they are affordable to the sailing enthusiast, popular as well.

Micro-multihull design display

Designers present on Sunday 18 September 1983 display of Micro Multihull designs:
Jim Young, Ron Given, Malcolm Tennant, Bernard Rhodes, Noel Fuller, Mike Hayes, Ian Swinton, Jim Keogh, Colin Palmer, Gary Baigent.
Other designers displayed but not in attendance:
Richard Woods, Ray Beale, Harold Evans, Albert Sedylmayer, Leon Talaic, John Mitchell.

Baigent: Bernie, (Rhodes) you are often concerned about this subject so would you lead off with some comments on the accommodation (sorry my bad joke) on Leon Talaic's Flying foiler.
Keogh: Doctor Rhodes is going to express an opinion on the patient (laughter).
Rhodes: I'm sorry I haven't studied the accommodation in detail so I can't really comment on that aspect.
Baigent: No, no, just comment generally on the design.
Rhodes: I think the flying foiler is very exciting but the big challenge is making them go to windward isn't it? - and not be a dog in the light. Possibly you've got the different angle of attack for the foils, 8 degrees for the front ones and about 3 degrees for the rear ones and if you could devise a system for light winds to cut that down to zero, making the system something like a conventional centreboarder, you could possibly get some fair speed. Then perhaps you could gradually crank in an angle of attack by worm gears or something similar. The trouble with this machinery is that it is heavy, the last thing you want on a light multihull.

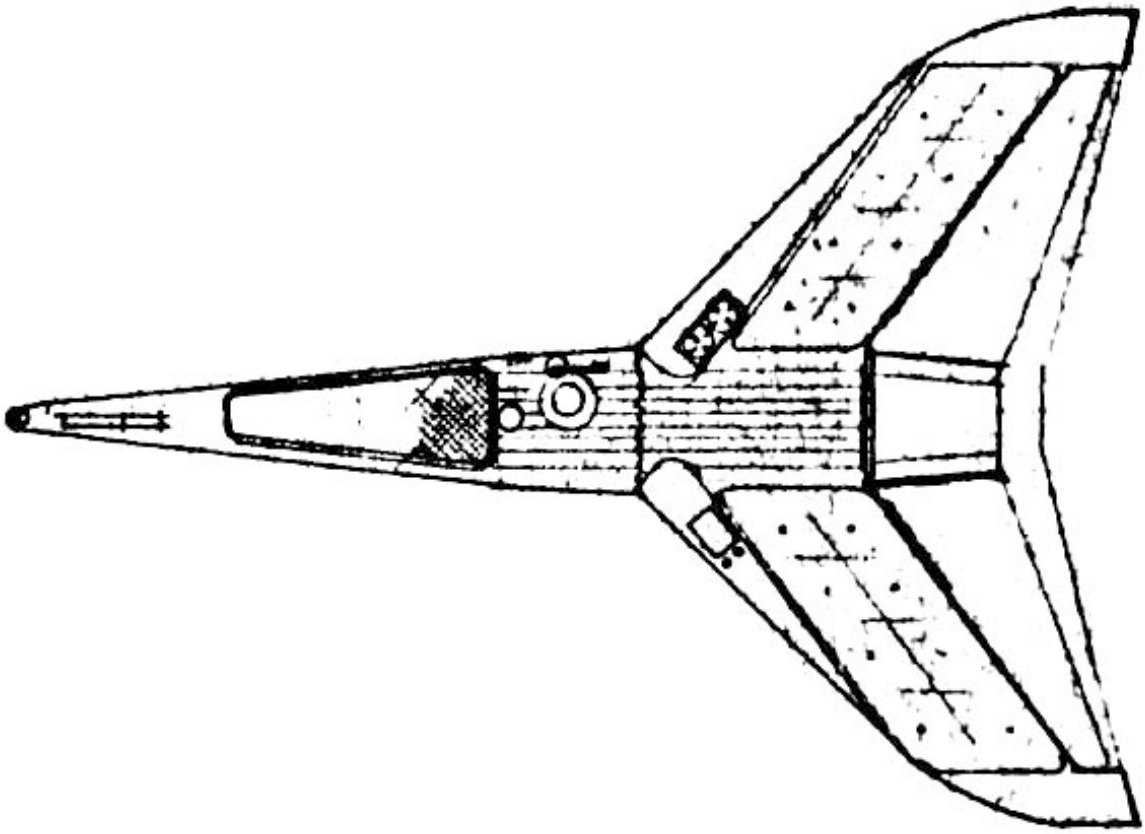

Leon Talaic design hydrofoil Micro-multihull

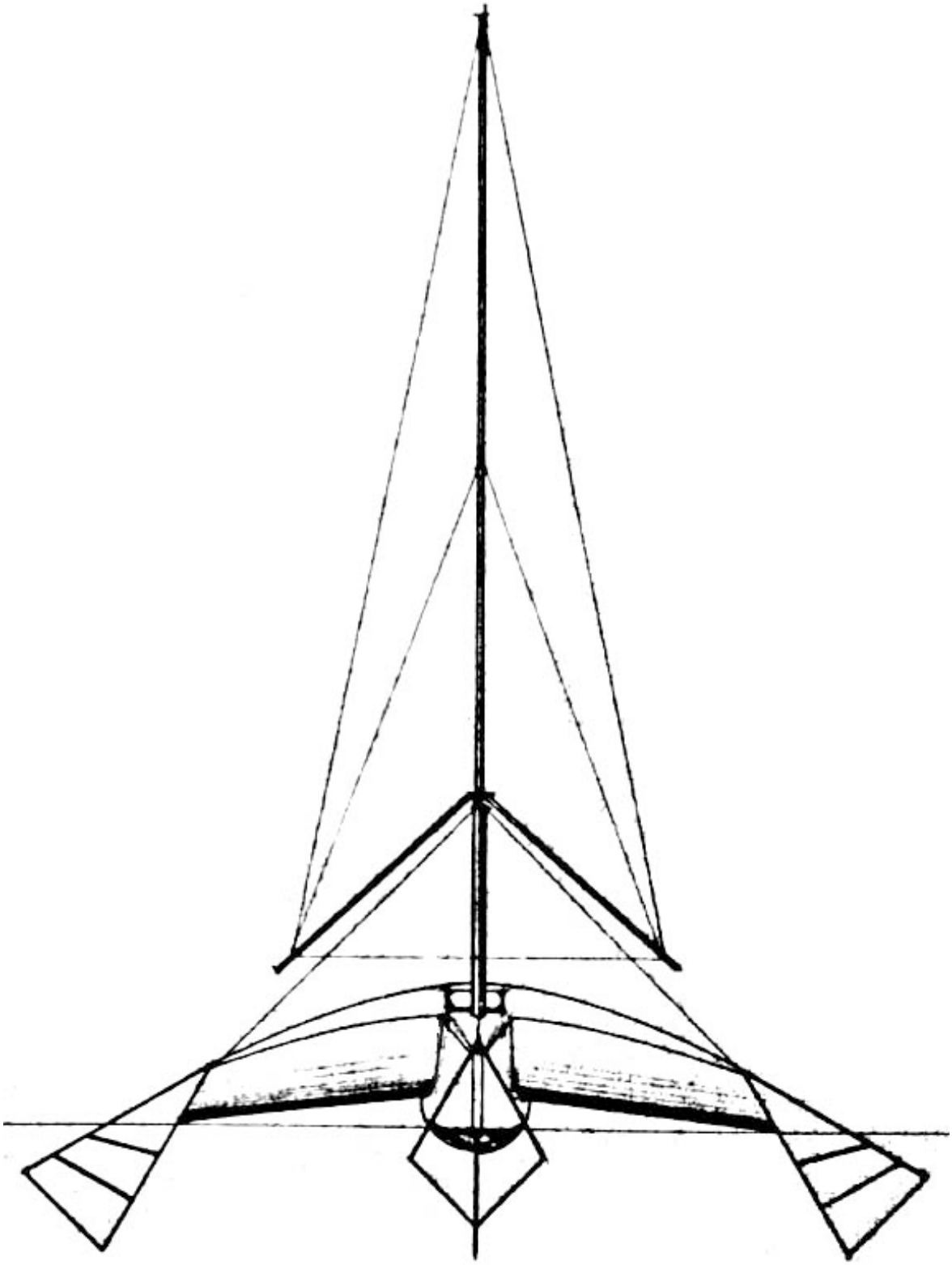

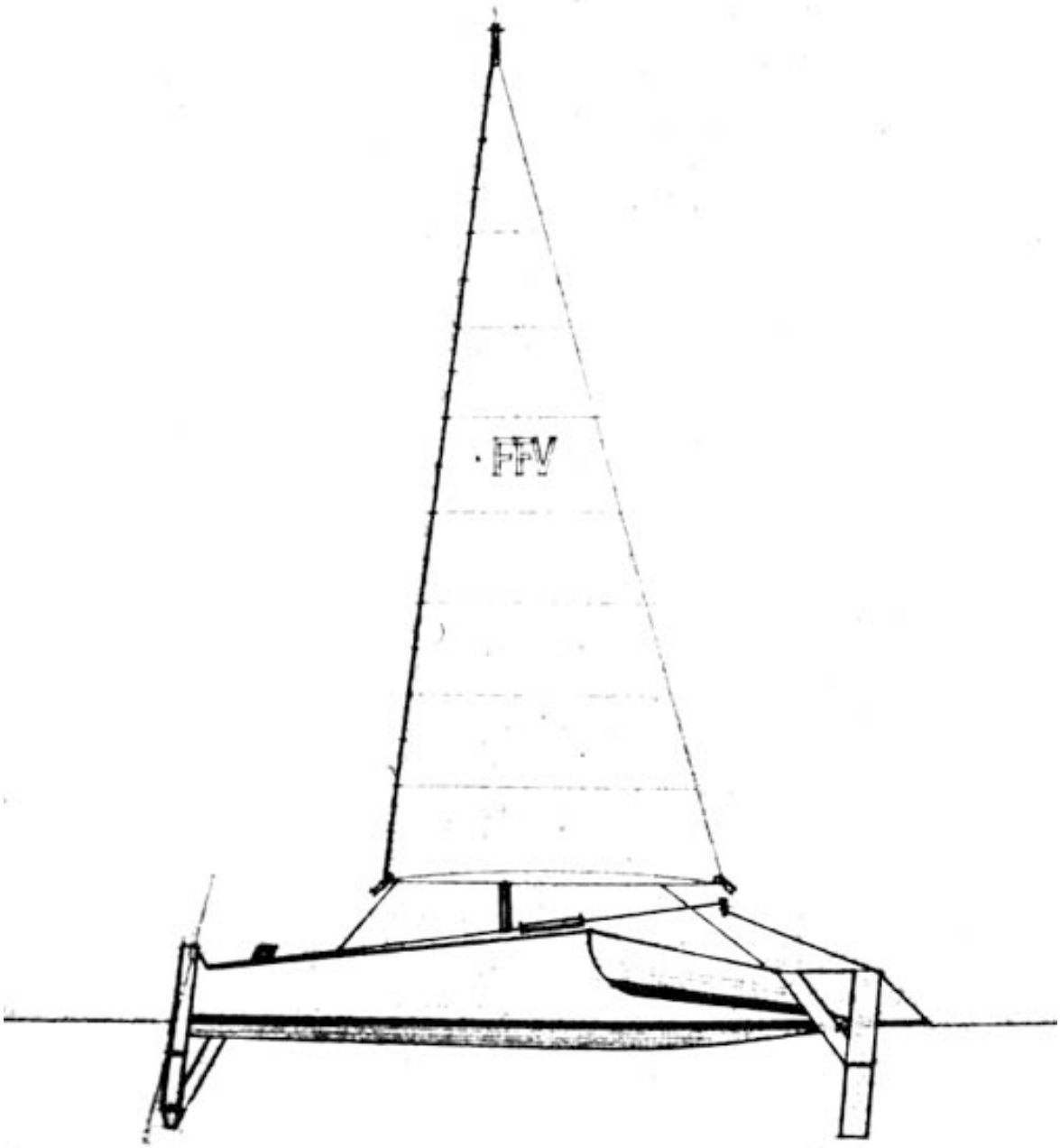

Leon Talaic hydrofoil

I think we should encourage this purist development research work like this design. It reminds me a little of Dave Keiper's Williwaw but even though this boat crossed the Pacific both ways, I heard tell that the boat wasn't that terrific to windward. It wouldn't be able to take on a monohull but it was a very comfortable boat – in flat calms and sloppy seas, he just put the foils down to stop the boat banging around. For cruising that's important. It means you can live comfortably on a small boat whereas previously, to have an easy motion you had to have a large boat.
Fuller: I talked to two people who had crewed on Williwaw and they confirmed the boat was a real dog to windward. But then, on the other hand, it was only because of

the foils that they survived from being pitchpoled. On some occasions they just got on these huge waves and the foils were the only reason they could keep the nose up.
Rhodes: I heard a different story, I heard they'd run it in up to the mast.
Fuller: The problem of going to windward is that the speed needed to keep the boat flying on its foils, generates an apparent wind that forces you off to leeward. Unfortunately to keep the boat airborne you have to be on a close reach.
Keogh: So therefore it wouldn't be able to compete as a micro multihull around a triangular course.
Baigent: Isn't it Dr. Sam Bradfield in the USA who claims he can build a flying foiler that can sail to windward? NF2 - Neither Fish nor Fowl, and B Class World Speed record holder.
Fuller: He's been trying hard but I don't know if he's succeeded.
Rhodes: What sort of speed does a land yacht sail to windward, does anyone know?
Palmer: You're probably down to 1.5 times wind speed when you're hard on the wind, or you can even keep sailing until you go about. With a wing mast in particular, the rig will still draw on very low angles of attack. But to weather competitively you would have to sail fractionally over wind speed. The higher you lay, the better you go, that is, without killing boat speed. Land yachts will sail very high, but when you lose boat speed and your apparent wind, the rig turns into a dog.
Rhodes: You find you have to peel off the wind to pick up speed?
Palmer: Oh sure, if you're taking a course to windward and then you're bearing away suddenly, you've got to do a huge arc to keep the apparent wind with you otherwise you're wasting your time.
Rhodes: The foilers might well be the same and require a similar type of approach.
Baigent: Okay. Shall we move on to Spyder.

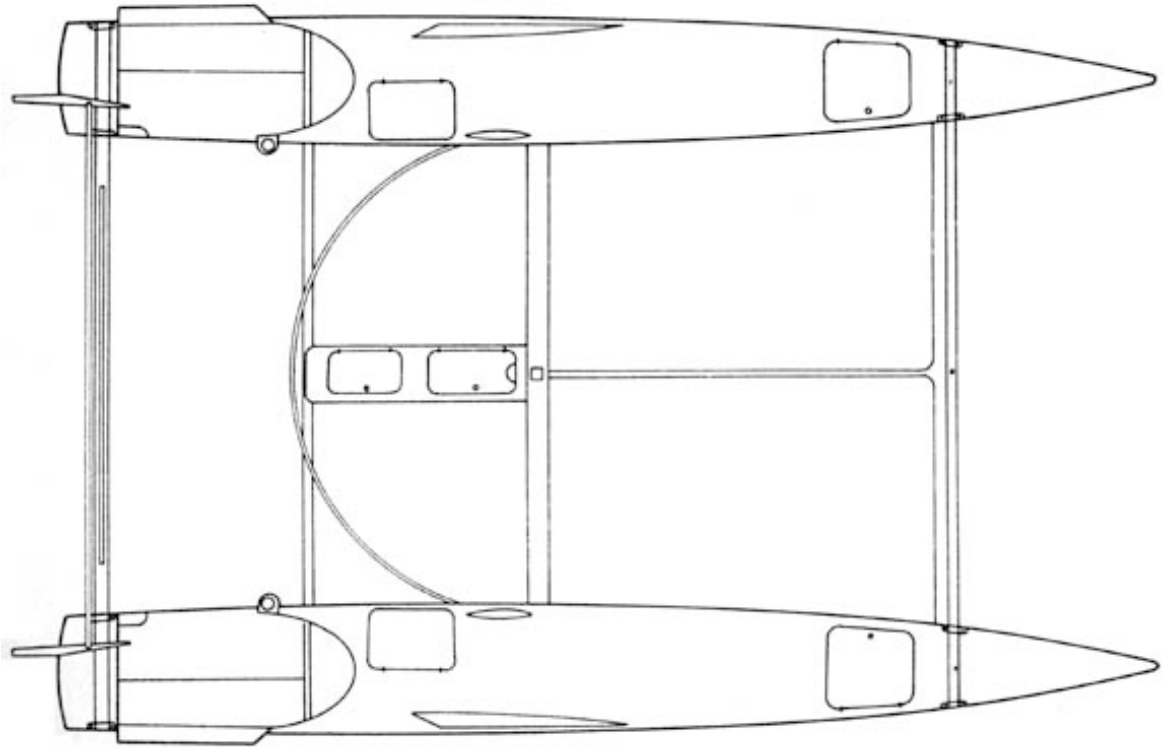

Malcolm Tennant design Spyder Micro-multihull

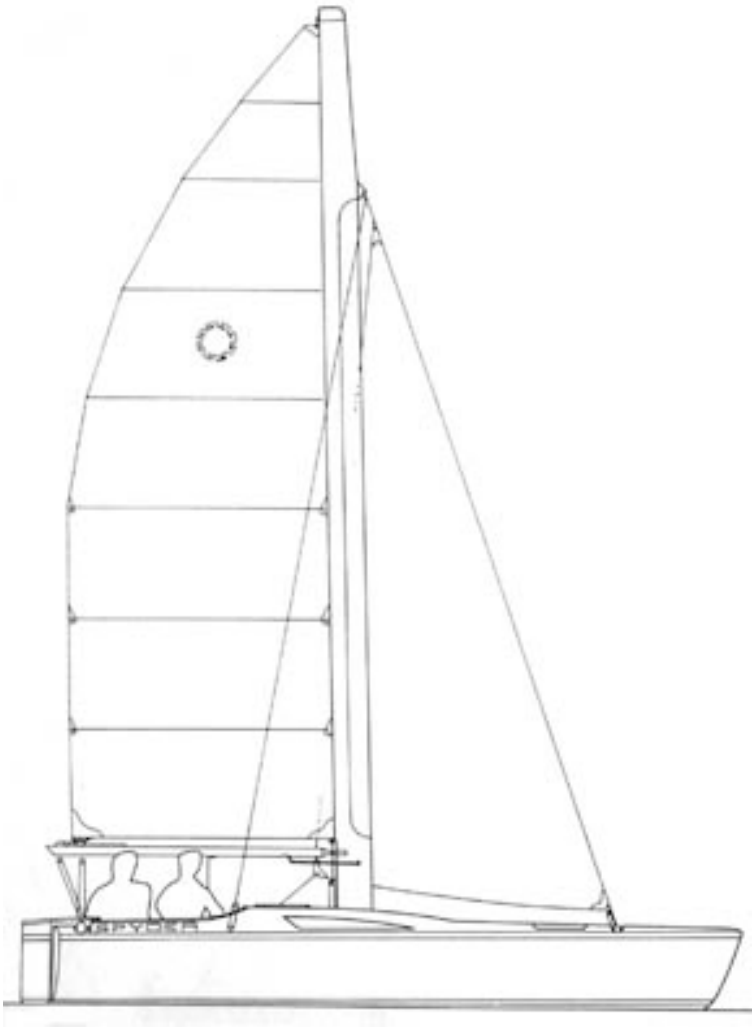

Tennant design Spyder

Tennant: Well, I've written a lot of material recently describing this boat. All I can say now is that it's an ordinary catamaran but that it takes everything to the maximum of the rule.
Rhodes: Is Spyder wider to its length than a Great Barrier Express?
Tennant: Yes.
Young: One of the requirements of the rule is that the boat be trailerable. There is a performance advantage if you go outside the limitations of a trailerable folding boat and end up with one that is merely demountable.
Keogh: Yes, you could say that the Fuller and Baigent trimaran foilers could only be carted about on Kenworth trucks (laughter).
Palmer: I think one of the concepts of the class is to appeal to a racing fraternity and there's no doubt that you have to look at things like these wide boats as being demountable – but still practically so. I mean as long as it doesn't take four hours to rig the boat up. I can't see anything wrong with that concept. And you need to do that to get a performance type of craft.
Given: I went to a demountable boat simply because this type is less expensive and lighter than a folding boat. While we have to accept the slightly greater time to take the boat apart and put it together again, you still end up with a lighter, cheaper and more competitive boat.

Tennant: (above, right) Basically I went to hull weight. I knew the sort of displacement I was after and the sort of length to beam ratio, it had to be a certain size to get the people inside the thing.
Young: That boat has an overall beam of 5 metres. That's pretty wide don't you think?
Tennant: Not by today's standards. It's about 66% which is a fairly common figure. I don't think I've ever had as boat less than about 55% so it's not really very unusual.
Baigent: Lock Crowther's boats in Australia have always been extremely wide for their lengths and they are also very successful.
Given: As the boat gets wider, you're not increasing the beam on each hull, therefore the strength factor in the spacing of the beam mounts on the hull require you to be more careful as the leverage factor is becoming much greater.
Tennant: Sure. And the ultimate problem is that the boat can trip diagonally and go over end.
Young: The wider the boat, the more stability it develops so that you can end up carrying sail in so much more wind. That is why it introduces the possibility of diagonal capsize.
Tennant: Which is one of the reasons why I put the rig well back. I also looked at a una rig but when I found it would be placed more forward than a GBE's, I went back to a headsail rig. It would have been an 11.6 metre mast on a 7.6 metre boat.
Young: It seems to be one of the difficulties with the una rig, getting the area without going too high with the mast.
Tennant: The length of the beam ratio of this boat is the same as the GBE – 14 to 1.
Young: And what happens when the hull is flying, what's it up to then?
Tennant: Not much at all. There's quite a lot of flare. In that situation the boat tends to fly a hull more than sinking the leeward hull.
Young: What weight is that boat then?
Tennant: 460 kgs, about 1000 lbs. That is based on 6mm cedar with 9 oz. semi-unidirectional glass either side. The wing mast is there because, although they can be a bit of a pain, I felt it gave rightability and it would stop the boat inverting itself if capsized. That is if it didn't break. Then you would be able to get the boat on its feet again – like Jan Gougeon's Splinter or the UK inflatable Catapult, where they ease off the upper shroud, letting the hull come back past vertical so that the boat comes upright.
Baigent: I believe the Supercat 20 is set up the same way.
Young: If that boat capsized, the mast would go underwater so that the boat would be floating at 20-30 degrees past horizontal. Therefore with the top part of the mast and the sail acting like a sea anchor, the whole boat would blow round the sail and maybe blow upright again.
Tennant: Back in the days of the A Class catamarans here when we used to turn over fairly regularly, the basic technique for getting them up was, as it went over, you'd get off the boat so that the mast didn't go too far down, put your weight forward on the main beam, sail round so the mast is up to windward and then, fooof! – it blows the boat upright again.
Given: As soon as the wind gets an angle of attack under the sail, it will invert like an umbrella on a Wellington day and lift the boat upright.
Tennant: And that was true of blokes my size, we could get an A Class back up again.
Given: One last thing, Malcolm (Tennant) has put hatches through the top of the cabin and not through the back – I presume you've done that because of the structure?
Tennant: I was running into problems getting enough space and besides which, the guy I originally drew it for is 15 stone and way over 6 feet tall. He said, "I can't get through that hatch," simple as that.
Given: The only trouble with that solution, hatches in the leeward side tend to let water into the hull when you are sailing fast. But we have got basically racing boats and I guess we'll just have to put up with that.

Swinton: Well I have to admit to not knowing very much about multihulls but have been asked to provide a design. The concept of the proa, I feel, is that I could see that weight could be kept to a minimum more readily. The disadvantage is obviously going to be manoeuvrability and difficulty with the rig. I've adapted a rig which will perform something like a windsurfer such that it would, by devious sheeting which I haven't worked out, be able to be cocked to weather. Among other things it would reduce the heeling forces on it fairly drastically and make it a fun boat to sai. There would be some interesting lessons to be learnt jn achieving good results. In terms of getting accommodation in, it is poked underneath this area in a fairly claustrophobic manner and that has dictated the beam of the waterline – about 500mm. The headroom occurs under the hatch at either end and I think now, that it has made the hull look a bit high in these areas. The rudders are retractable and fair into the bottom of the hull. Sailing, the rig would be kept to leeward much like Dick Newick's Cheers.

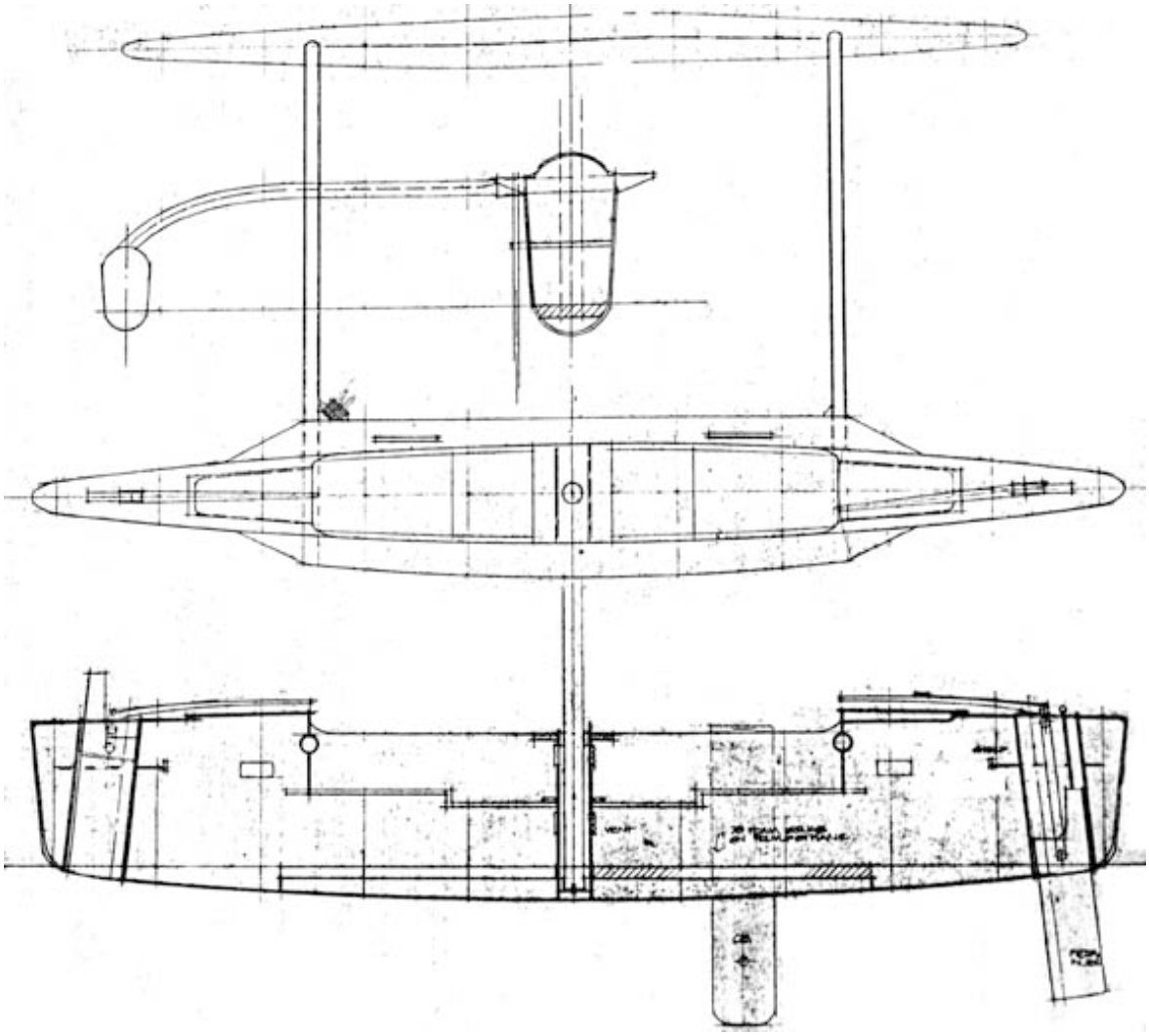

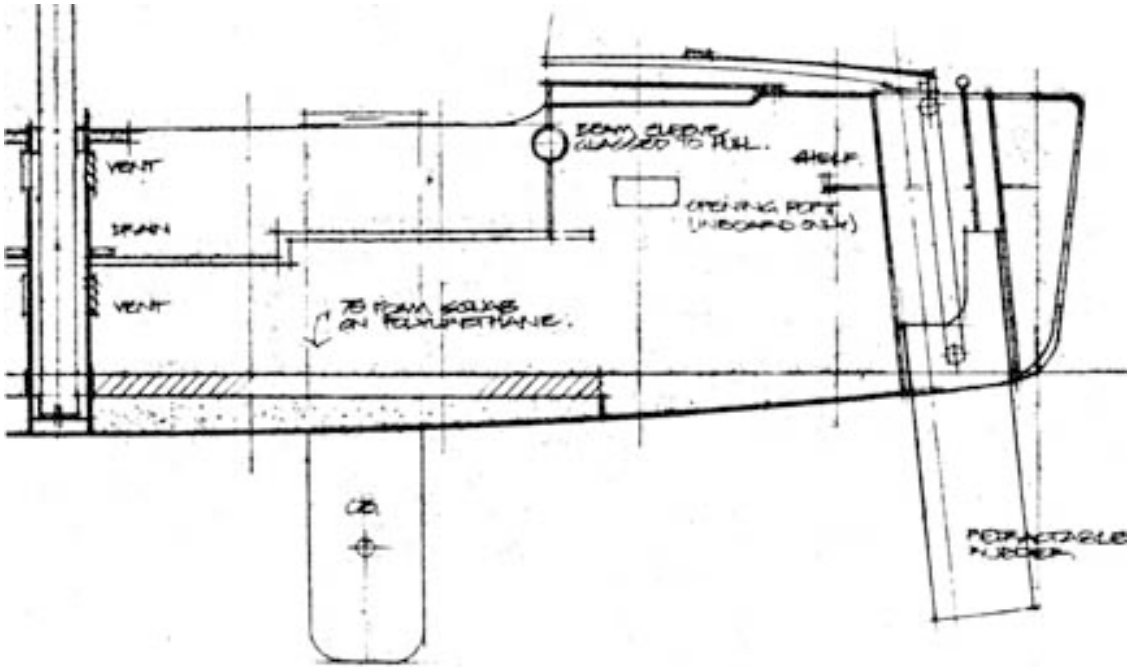

Keogh: Is the ama always sailed to leeward - could it go both ways?
Swinton: It could sail both ways except that the crew weight would be near the leeward hull, which wouldn't be very good if you got overpowered.
Rhodes: One problem that has been discovered in England is that when leaning the rig to windward to get a good heeling moment, turning it into lift, is that when the boat flew a hull and the rig came suddenly upright increasing its area, then suddenly the boat went over very quickly. But the Atlantic proa like Cheers in concept is the most efficient one in theory, in my opinion, it's like a catamaran with everything on the windward hull therefore making the boat very powerful.
Fuller: Joseph Norwood would disagree with that.
Young: How do you work those rudders?
Swinton: This line through here shows the pivoting point; it is relatively close to the leading edge and would need a sleeved stock, which would be tricky. To lift it there is a block and tackle that goes back to the tiller, to push the rudder down requires a stick. I think that going about is not going to be the fastest process in the world, you're not going to get into a tacking duel.
Keogh: What happens to the shaft? Does it stick up?
Swinton: No it doesn't, it's sleeved.
Keogh: Oh good, good, wish I'd thought of that. (laughter)
Young: Why didn't you have a transom hung rudder?
Swinton: It just seemed that driving to windward and plunging a bit, you'd have problems if the lifted rudder was in the forward bow sections there.
Young: No, you'd take it off and rush to the other end with it. (laughter)
Swinton: Sod's law of the sea, I'm sure, would have someone falling overboard clutching the rudder.

Rhodes: What about using the forward rudder as a foil similar to a leeboard on Cheers. That seemed pretty successful. See what I mean, you'd leave part of the forward rudder down. Then that would hold you up into the wind as a leeway resistor. Whoever solves the steering problem on proas is really onto something.
Keogh: Not having a rudder solves the problem.
Rhodes: Well, I'd better keep out of your way if you have no rudder.
Keogh: You can sail, well, on the Pacific flying proa, you mostly sail without a rudder – it's only dead downhill that you need one.
Given: But you can't manoeuvre without a rudder.
Keogh: You can. You haul on the sheet and the boat will go up to windward, you ease the sheet and the boat will go down
Rhodes: But at the start of a race you would want very fine control. Cheers was fine on the open Atlantic but round the start line the boat was a menace.
Keogh: From what I've seen most multihulls seem to be a menace at the start line.
Fuller: Well, my drawing is not so much a design as a talking point. I've intended to introduce the concept of foil stabilization but realized there's a lot of things to change. Whatever Jim Keogh says about small floats on a foiler, this one has been calculated not to go over if it got caught aback in a gust. On a foil stabilized yacht, the angle of the foils is used to generate a force that exactly opposes the heeling force of the sail and at the same time, supplies lateral resistance.

In a properly balanced out yacht this relationship holds true over all wind strengths. On this boat the foil area and the reserve area above the water is equal, even when the boat is hit by a strong gust, to the entire displacement of the boat. Just imagine trying to push a foil floating on the surface, straight down, punching with your fist. What would happen is that you'd probably break your fist. And on this boat, once the foil starts moving forwards, or backwards, it begins to develop dynamic lift – and the boat comes back to its normal angle of heel. I've proved this sort of thing happens with my own small foil boat.
Young: What boat is that?
Fuller: It's a small 14 foot foil stabilized boat named Sabrina. (previous page)
Baigent: He sailed it from here to the Bay of Islands.
Young: You sailed it to the Bay of Islands? My word!
Fuller: One of the things that I discovered on that sail was that in strong winds and large waves, well for my small boat Sabrina they were large waves, the windward foil holds you down. When the lee foil comes clear in a trough, the windward foil, in my opinion, still holds you steady. This result in a foiler produces sailing in a more vertical position than a cat or a tri. The other advantage is that foils go through waves with far less resistance than floats and this gives you a very comfortable ride, no rolling and reduced pitching.
Palmer: Has anyone else done this?

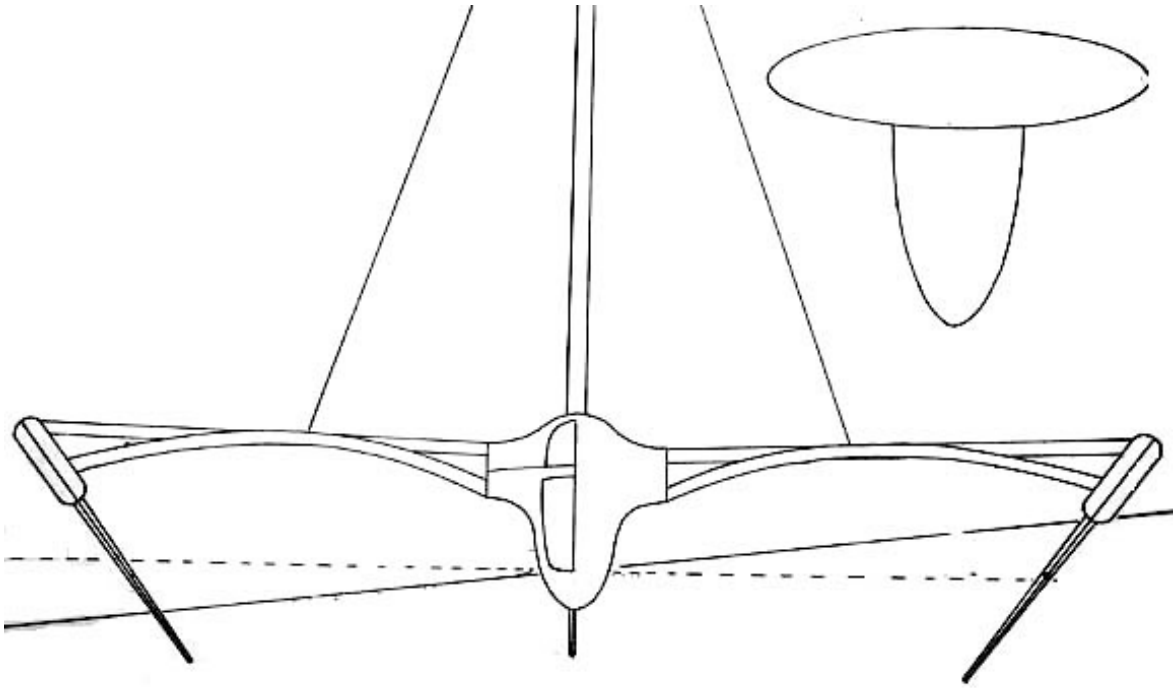

left: Noel Fuller's foiler Sabrina – above Fuller's Micro-multihull foiler

Fuller: A number of people have built craft on this principle. Eric Tabarly's Paul Ricard would be the most outstanding.
Young: Does the boat make much leeway?
Fuller: Weelllll.
Rhodes: Come on. It makes plenty.
Fuller: Well, Sabrina has low aspect foils which act like hydroplanes. They are fairly inefficient but this new design displayed here has much higher aspect foils and I've proven

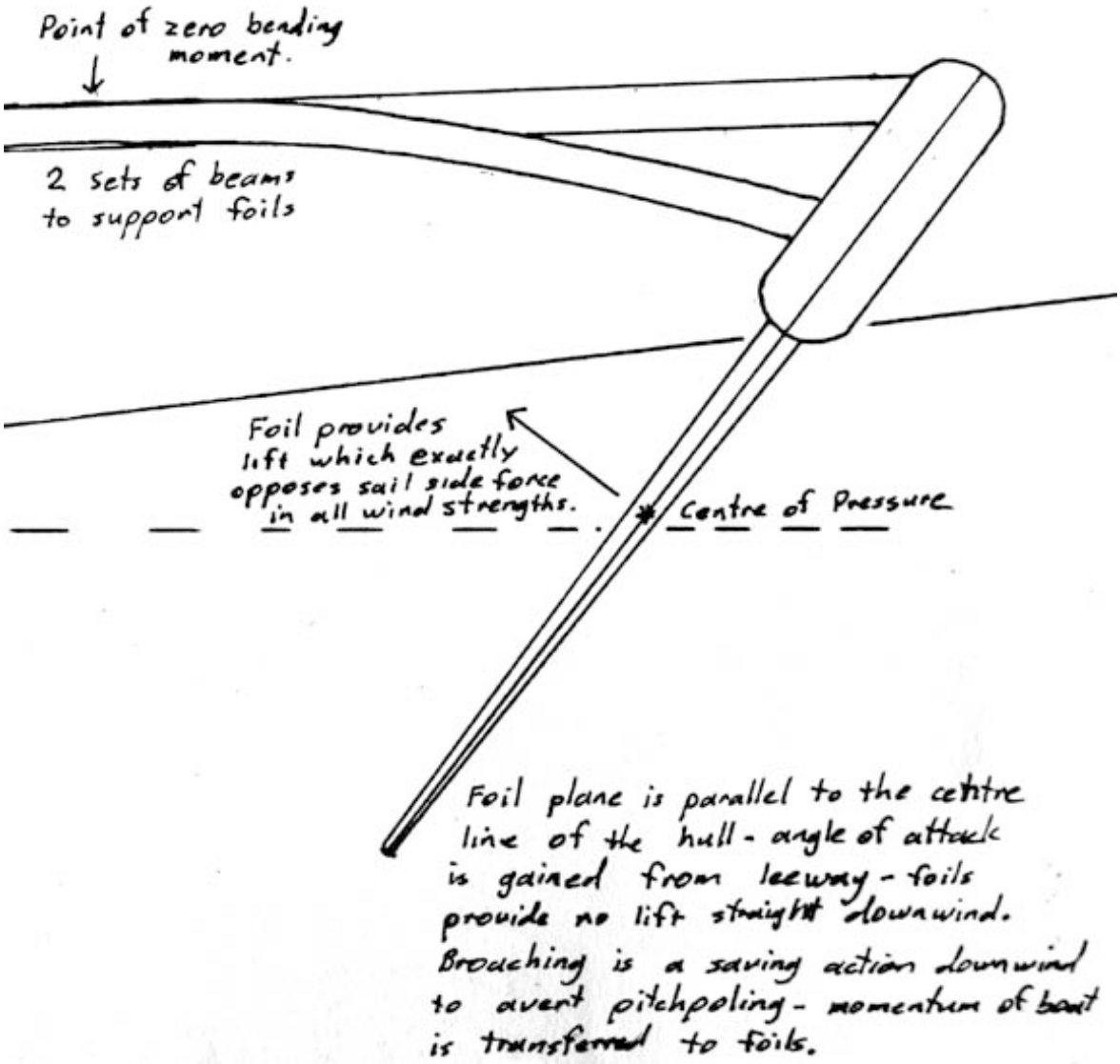

Foil diagram of Fuller foiler

that they perform much more efficiently. Nevertheless, water does escape under the leeward foil but the windward one behaves in a better manner, no water escapes from its scooping action.

Palmer: What weight is this boat?

Fuller: I chose an empty weight of 500 kgs. because it represents a weight that would be easy to build without having to use exotics. However in fitting the rule and achieving a Bruce Number of 2, this requires a fairly large sail area of 39.65 sq.m – and it proved very difficult to get the centre of effort low enough to achieve a properly stabilized boat. As it is the overall beam is 10.4 m. – which some people might consider excessive. (laughter)

Young: Is your other boat's beam the same as its length?

Fuller: Yes, in retrospect I'd now choose a lighter weight, about 400 kgs. and that would enable a better rig on this new boat. I'd also drop the profile of the hull which is in excess of the headroom required. This would also improve the centre of effort by bringing it down. For preference I'd rather go to a foiler with a single foil which could be used both to leeward and to windward. This would significantly reduce beam and enable an efficient rig. However I'd have to live with the possibility of the foil coming unstuck when it was to weather. (laughter)

Hayes: I have chosen the trimaran configuration (above, right) because of short course racing that would take place in the Micro-multihulls, the tris tack well and are quick in smooth water.

I worked backwards from the area requirement of crew weight, safety gear, etc. which basically established a weight and displacement figure. From then on I attempted to draw something practical while optimizing the boat to the rule. Also I felt it would be a useful boat to have around the Gulf whether the Micro-multihull got established as a class or not and it also could be handicapped for mixed fleet racing anyway.

I have used the centre cockpit concept to keep weight out of the ends which, from an engineering point of view, provide a box girder, crash bulkhead unit which can accept the stress loadings from the beams, rig and daggerboard case. At the same time it will contain flooding in the event of damage.

Young: Don't you find that beam setup will be flexible?

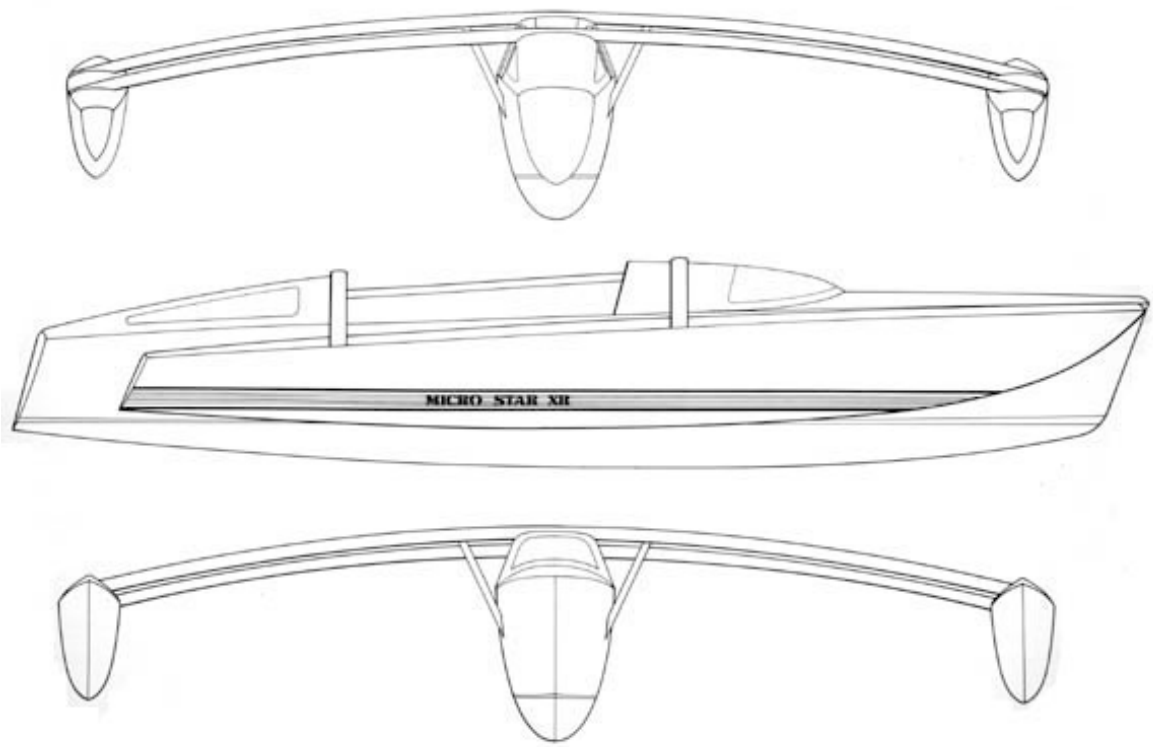

Above and over page: Mike Hayes' elegant design Micro-multihull

Hayes: It was intended to be considered as a dynamic flexible structure – there would be a fair amount of movement and flexing at the float. The beams are intended to be built of Kevlar, epoxy laminate with the possibility of carbon fibre stiffening. These will act as torque tubes transmitting the dynamic forces from the sails.
Baigent: The bow sections of the floats have a lot of cutaway. Why have you done that?
Hayes: The raked bows on the floats are intended to give an early warning of a diagonal capsize by providing reserve buoyancy which will come into play as the bow is depressed.
Keogh: And it looks very good. I'm a firm believer in that if a thing looks right, it is right.
Fuller: Dave Barker (who designed Sundancer and Stratosphere) says that no matter how a boat looks, if it is first round the mark it looks beautiful.
Hayes: The normal comment coming back from anyone is that the central cockpit is very wet. The cockpit here is 7 feet forward from where an aft cockpit would be positioned but I don't think this will make very much difference to the wetness. Small, fast boats are inherently wet.
Baigent: Harold Evans (next page) is one of the few monohull designers represented here with enough courage to draw a multihull, please keep that in mind.

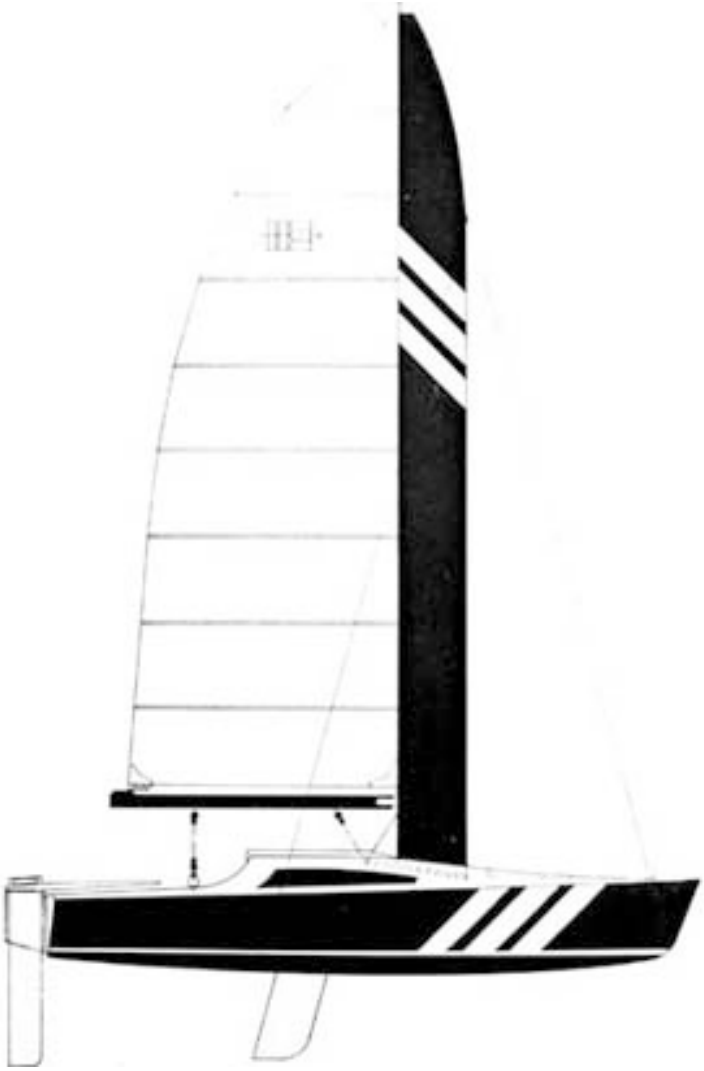

Harold Evans design

Given: I must praise him for his effort. It's a good looking boat. The only thing I really have to comment on is that the mast is placed too far forward for the fine bows to support.
Tennant: Also, with a wing mast the increased efficiency and drive of the rig allows you to place the boards much closer to the mast, closer than what you would expect. Harold has his too far aft, even for a conventional rig. He'd have a lot of lee helm.
Young: His folding system looks well thought out. I presume these other beams here slot into place once the main beams have been opened out.
Given: I wonder also why he has placed his cockpit seating position on the inboard side. I know the rule states that sitting out aids are illegal but Harold is losing out on normal crew weight to weather by having the seating position where it is.
Young: My criticism of the boat is that it looks too much like a monohull.
Keogh: I agree. One of the things that has always amused me in the early days when multihulls were just arriving on the western scene, to make the boats acceptable to a conservative public, the designers tried to make their boats look like two monhulls put together. Instead of accepting that these boats are totally different to western tradition, they tried to water the concept down with this attitude. The result was an atrocious looking boat. That is not to say that this design is however.

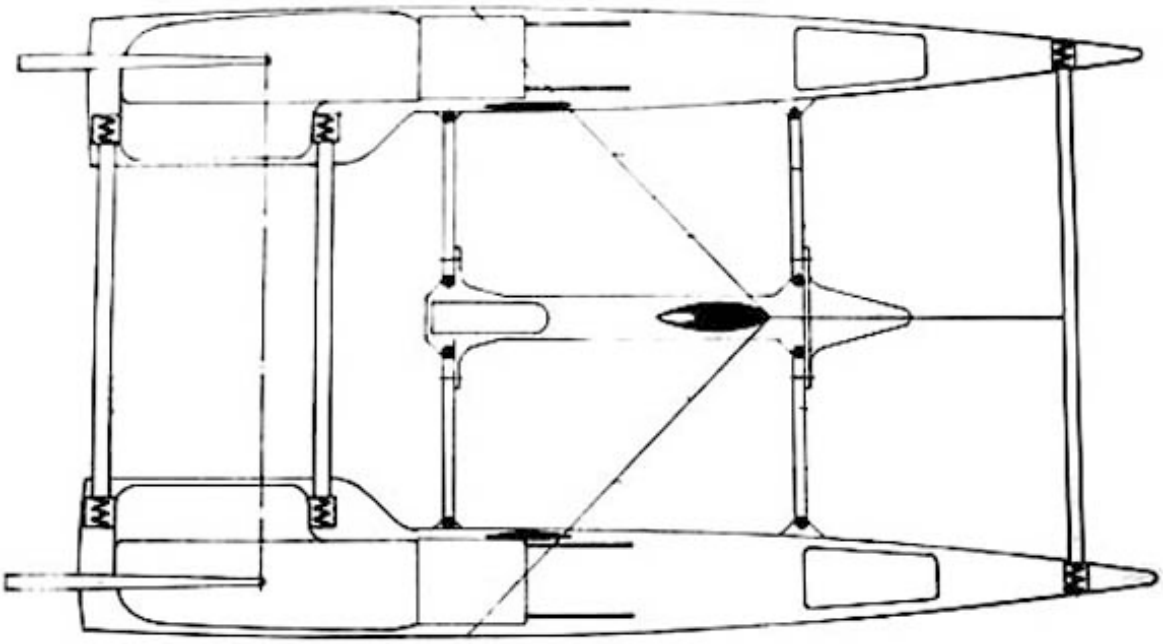

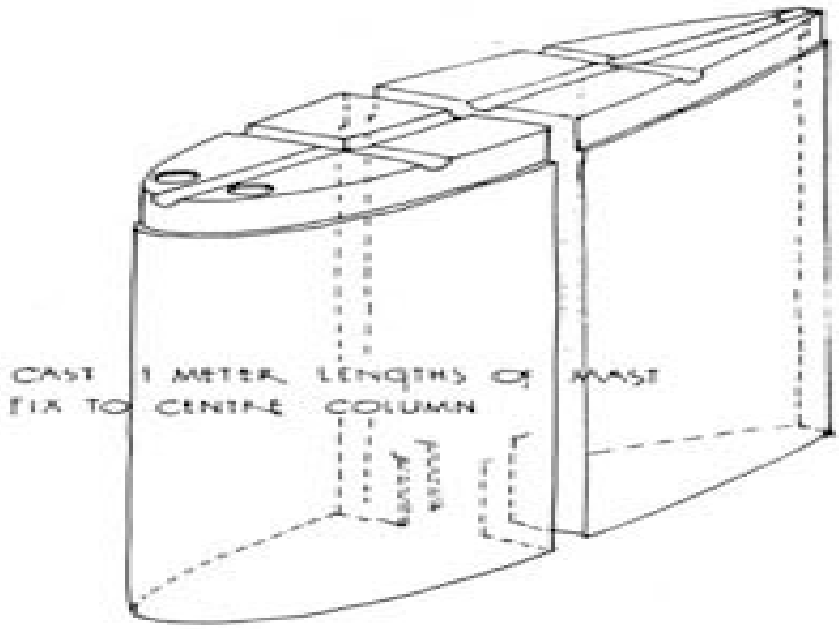

above top: Harold Evans Micro-multihull catamaran – above: Evans modular designed wing mast

Baigent: Albert Sedlmayer's design.
Young: It's one of his best, a good looking boat. (next page)
Rhodes: Angling the boards out this way. I suppose the theory is once you are flying a hull, the leeward board is more vertical.
Tennant: I do that on all my boats and I do it for no theoretical reason whatsoever. It's simply to make lifting of the boards easier.
Given: Some theory is fabulous - but you can get out on the harbour and you'll find quite often that the theory does not work. A catamaran with angled boards such as a foil stabilized boat like the Australian Seawinds 24, it's a major operation when it

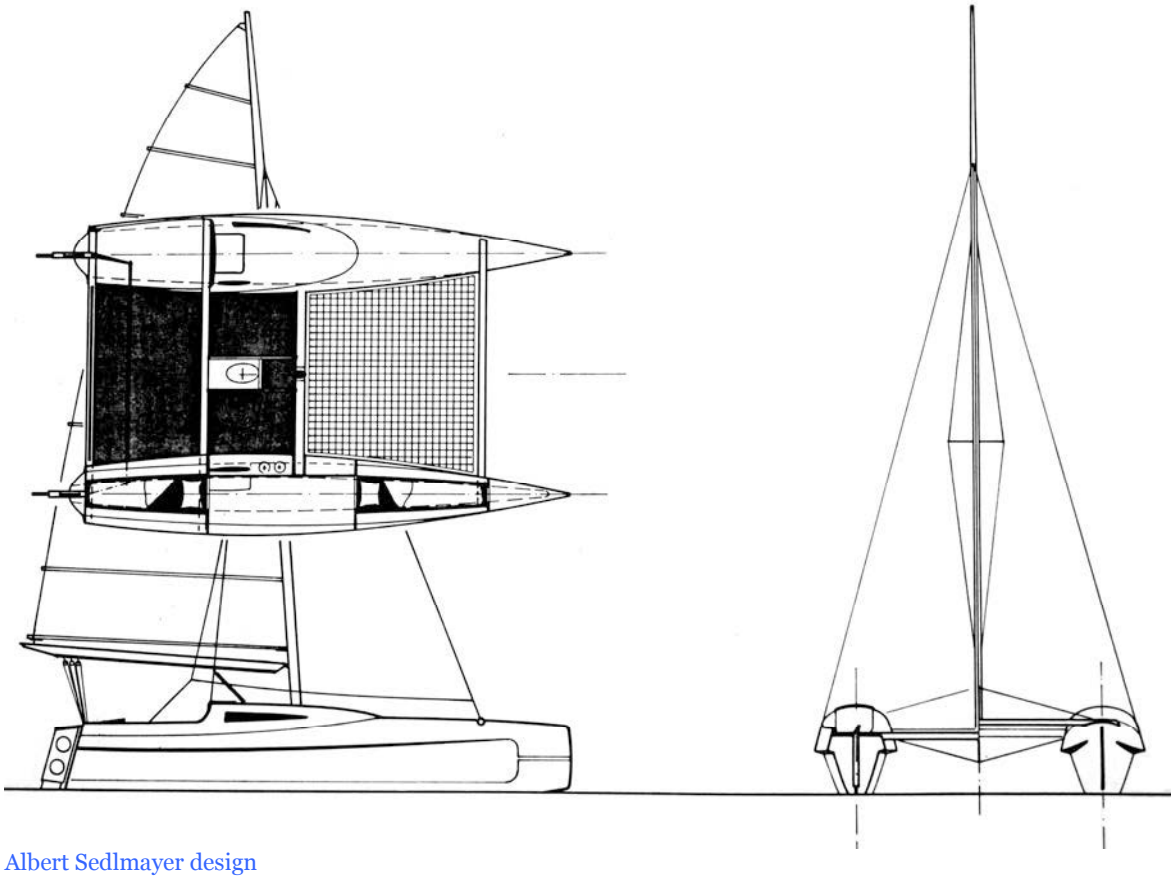

Albert Sedlmayer design

comes to raise a board. If you are in a certain sailing situation, if you don't shift the boards because they're awkward to move, you're going to quite possibly capsize.
Rhodes: If you're going to be racing around the Gulf, the angled out windward board, such as on the Given and Tennant cats is going to help lift the windward hull as soon as possible I suppose. And that will help you in a way but then you are going to have to accept that it's pretty much a pure racing boat if you are flying a hull.
Given: Regardless what theory tells you, there are quite a number of catamarans sailing with boards angled out underwater and even while they have two boards immersed at theoretically the wrong angle, they still sail very well to windward. To my mind the inferiority of angled out boards has not been proven.
Rhodes: I agree if they are only at an angle of a few degrees off vertical that this is not going to affect your performance much at all. I'm looking at a knock down situation.
Given: Well then, you can quite easily lift them up, can't you?
Fuller: Providing you luff the boat first.
Given: On the Australian Seawinds, it's almost impossible to get the dagger boards up because of the shape of the boat. You're going to be leaning out over that smooth, round fiberglass deck and cabin and from there, try and pull the board up – it's not going to be possible.
Fuller: To do things like that you really require some remote control.
Young: Deep dagger boards have a much greater tendency to cause capsize. That is why I believe in quadrant-type centerboard for multihulls. If you hit something you don't break anything. Also if you have a quadrant board fitted into the side of the

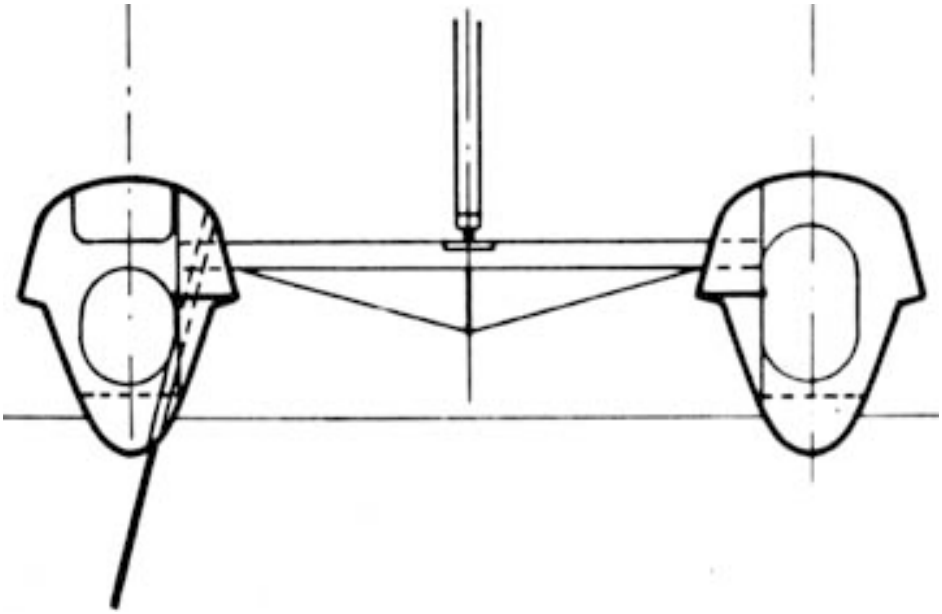

Angled daggerboards on Sedelmayer catamaran

cabin, you could then have it lying so the board slopes inwards underwater. That provides lift for the leeward hull and also has a tendency to pull the windward one down. At the same time you have no problems in raising and lowering this board type and being quadrant shaped, it always fits the cabin and never creates turbulence.
Baigent: But as boats become more performance oriented, those quadrant boards are not going to perform as well as dagger boards.
Young: Well it's a question of what percentage difference you'd get in performance of the two types. There are many things that come into it.
Baigent: One of the minor gripes of the Tornado is the shape of their quadrant board.
Young: What don't they like about it?
Baigent: They don't like the inefficient shape and section of it, nor the draggy gasket in the slot behind.
Tennant: And you can't do anything with it either because of the rule.
Young: Do they really know that the shape is wrong – or is it just a shape they don't like?
Baigent: Actually in spite of this, the Tornado goes pretty well to windward, you don't hear anyone complaining.
Given: It depends on how much you emphasize the damage of the board. I've sailed cats now for 15 years on boats 14 to 60 feet and I've hit every type of sea bottom possible with dagger boards. I've never yet made a boat leak by damaging a dagger board. I've always tried to construct the board so that it is weaker than the case and so far, I've never been frightened back to a quadrant board. Also on the bigger cats, you never have any trouble cleaning them, you just lift them out the top of the boat, clean the case through the top, check it over with no problems.
I've also been involved with quadrant board boats and both of these have given us trouble. You can't fix them without pulling the boat out of the water, they're difficult to maintain and so that is why I prefer the simpler dagger board configuration.
Keogh: Yes, what do you do when quadrant boards jamb up while you are sailing?
Given: Even a broken dagger board can be lifted from its case one way or another.
Young: All boards will jamb if they're badly made. If there are barnacles over it , then the whole boat will be poorly maintained. The rig will probably fall over too.

Baigent: Bernie has described his trimaran Klis many times but now he has fitted foils to the boat.
Rhodes: Yes, I have been working with Denny Reid on a new development in an attempt to damp out motion, particularly when sailing to weather in a small boat. If you are sailing any distance, motion is the killer, the crew can't get any rest, particularly if the boat is leaping around and the bunk keeps disappearing from under you.
Klis had original boards that were of an asymmetric section with an arc of a circle shape. The small tri could clean up Half Tonners on the wind but I was a little disturbed with the boards for when you were hit by a gust, they definitely had a tripping effect.
So what we've got now are new vertical boards that come down two feet and then angle 18 inches at a 30 degree angle to the waterline. They are high lift, asymmetrical section with camber well forward like an aircraft wing. They dramatically damp out pitch and roll. We also have an inverted T foil on the rudder and we find now, with

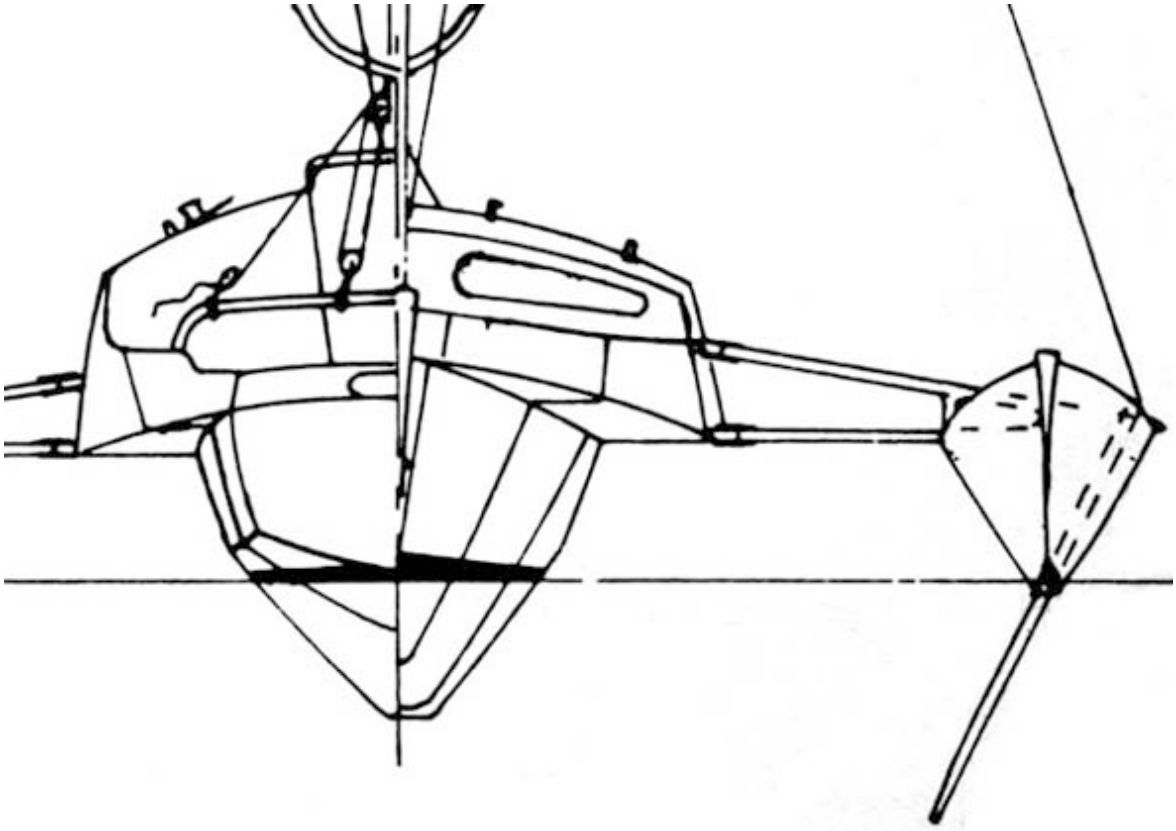

Lifting, angled foils on Bernard Rhodes design Klis

pitching stamped out that the kettle stays on the stove without us having to hold it there while bashing to windward in 25 knots. I believe also that by damping pitching, we have improved the wind flow over the rig. So for a high performance boat, foils are going to come in.
Reaching at high speeds, calculations show that we have 300 lbs. of lift on the lee foil, that's the same as having two bods on the windward float. We know the boat will do 16 knots without foils so we are looking forward to doing some exploring. I can visualize us getting into a semi-flying position without going to elaborate foils of the true flying boat.
Also with the vertical part of our boards, we still retain good windward performance and we cleaned up a 37 foot keeler an hour ago. In respect to trimarans with vertical side and tumble

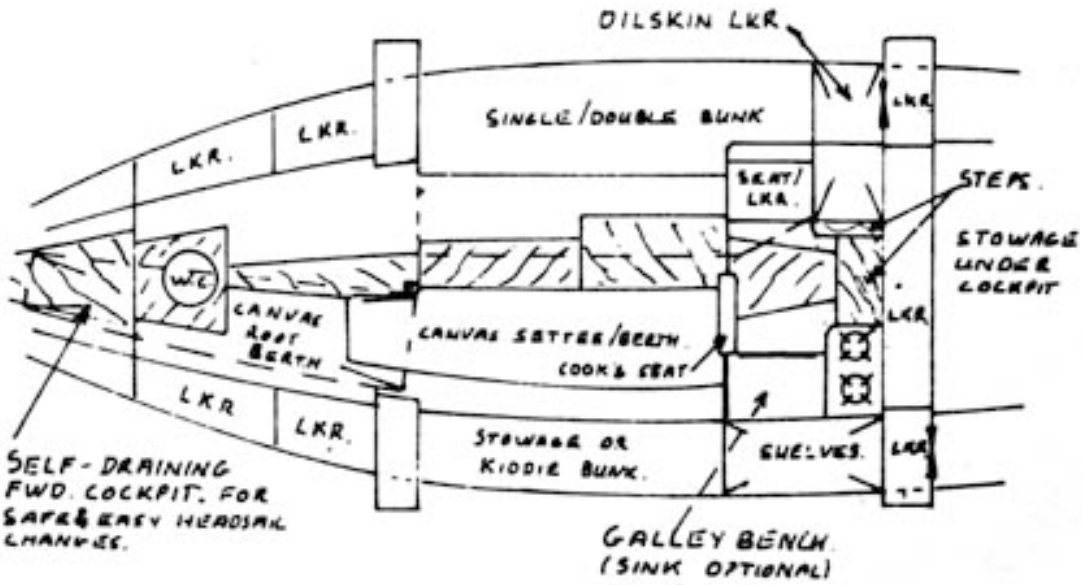

Klis interior

home on their floats, unlike the veed sections on Klis, they dig in when hit by large seas and high winds. V shaped floats saved me once in the Bay of Biscay when I encountered such conditions, the floats tried to plane out of the water, saving me from tripping.
Fuller: Rounded decks like on a Great Barrier Express have also saved them in such conditions. When Richard Pilkington jammed his mainsheet and got hit by a gust he went up to 90 degrees and skidded along on the round deck. A sharp gunwhale or flat deck would have seen him go over.
Baigent: Okay, now have a look at this huge rigged Mitchell design.
Fuller: I personally don't believe that rig. It is too high an aspect ratio for the rule.
Young: What fools me is that I've drawn a rig of 480 sq. ft. and I thought that was pretty big but it still does not look anything like that.
Keogh: That headboard would have to be monstrous to handle the mainsail roach, must be very heavy.
Given: Keeping in mind a boat of that weight - and then transferring across to the hull lines in the forward sections, then looking to where the mast is stepped, shows us that the centre of gravity must be very high. It would be interesting to see how long the front of that boat would stay up.
Palmer: It has fairly full bow sections with that bulb.
Tennant: But once the bows go down, they're down, there's no reserve buoyancy there.
Fuller: A comment coming back from Australia is that bulbous bows definitely cut out pitching and crews come back from a race dry whereas before they were always wet.
Hayes: I think John Mitchell has used the bulbous bow as a rule cheat and he's brought the bow out from the base of the stem below the waterline.
Young: My question is whether the bulbous bow damps out pitching or whether it gets rid of the upper buoyancy in the topsides.
Keogh: On this boat, the rig and even the bow steering rudder, should be further back. The placement of the rig is really in the conventional position whereas most of the experiment\ ones I've seen overseas, everything is shifted aft. I think the reason for this is that they've been wanting to stop that horrific leeward hull nose burying thing that cats are sometimes prone to do. Well, it might not scare you guys, but it always frightens me. (laughter)

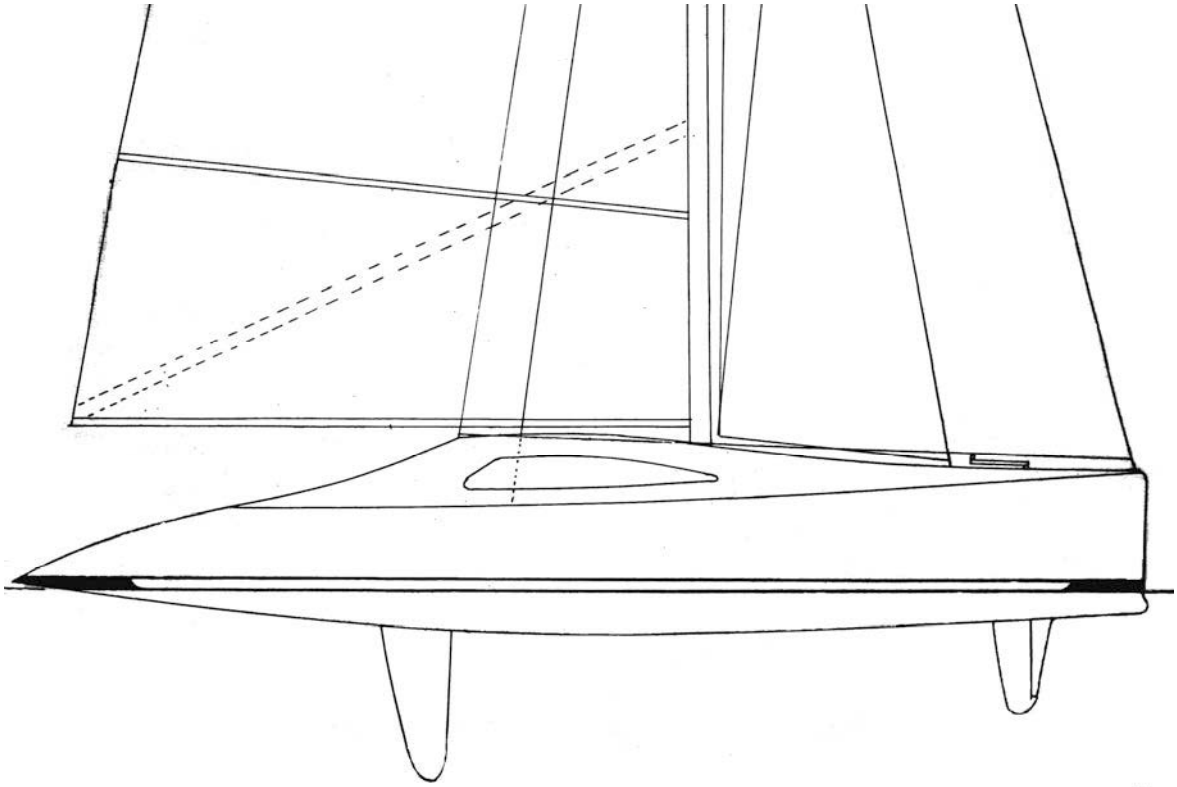

John Mitchell designed bow steering catamaran

Given: I don't know or admit knowing anything about forward steering but this set up has a fixed skeg that stays fore and aft. I think that could cause a drastic situation at high speed. When you change the angle of attack of the rudder blade, if the skeg stays straight .....?
Young: Skegs and rudders come and go like fashionable clothing. Originally the aim of the skeg was to bend the water, rather than shock it round the blade. The skeg came about because of problems that keel boats had when falling over on their sides, broaching and rounding up to windward with their spade rudders. Then there was the business of putting horizontal foils on transom hung rudder blades to try and stop the air going down. But after a period of time it was found that they didn't really correct the problem. The foil is 9/10ths of the battle and also it's the stability of the boat that really causes the steering problems, rather than the rudder.
Baigent: Perhaps the reason for the skeg being at the bow is to slow down the steering. If you were surfing off some wave, that would be the last thing you would want, fast steering in the bow.
Keogh: I would have thought it would have been quite the reverse. On Bolger's Sharpie .....
Tennant: Don't forget that Bolger said multihulls need lee helm.
Keogh: I'm not saying that I am an expert. I tend not to knock guys that go this way because they're pressing into an area where most people are not willing to tread. I know that Bolger found bow steering to be sort of sluggish and unusual to say the least. The boat tended to do things he didn't expect it to. I drew a little cat along these lines because of my horror of lee bowing problems.
Fuller: To some extent, a rudder in the bow, if you have heel on the boat and bearing in mind that you have leeway, a rudder here would bring about positive lift at the bow.
Given: You have very little leeway with fine catamaran bows.

Hayes: I was sailing Boomeroo in the Quarter Ton series with a centerboard in the bow, similar to John Mitchell's set up but admittedly, it wasn't a multihull but it appeared to stop the bow from falling off when sailing on the wind. But if we forgot to take it up when sailing off the wind, it took charge and overcame the steering, a frightening situation. (laughter)
Keogh: On the other hand, the scows regularly had three centerboards and they used to put down the bow one when going on the wind, and lifted the after one – the middle and the bow ones down.
Baigent: Harold Evans had something similar with his scow-like boat Xyloid Millinary. There are two foils mounted at downward angles just above the static waterline at the bow. When the boat heels, it buries the leeward foil and seems to hold the boat steady on course. But how that boat pounded - nothing to do with the bow foils though.
Young: There's no reason why you couldn't have a small centerboard in the bow and have a large rudder aft which would do most of the job of resisting leeway. The rudder is one of the most important things on a boat and it's also pretty vulnerable. So it is best to have it mounted in a position where it's least likely to get damaged, down aft.
One of the beauties of multihulls is that they can be sailed in shallow water but if you've got a vulnerable underwater appendage, then you will treat the boat like a keeler and never go near shallow water.
Baigent: How do you get around that shallow water problem on Klis, Bernie?
Rhodes: What I've found when I had dagger boards on Klis, you hit the bottom and do a sharp gybe around the board willy-nilly, there's nothing you can do about it. One thing about this is that you are being stopped on the centerline with a conventionally positioned board.

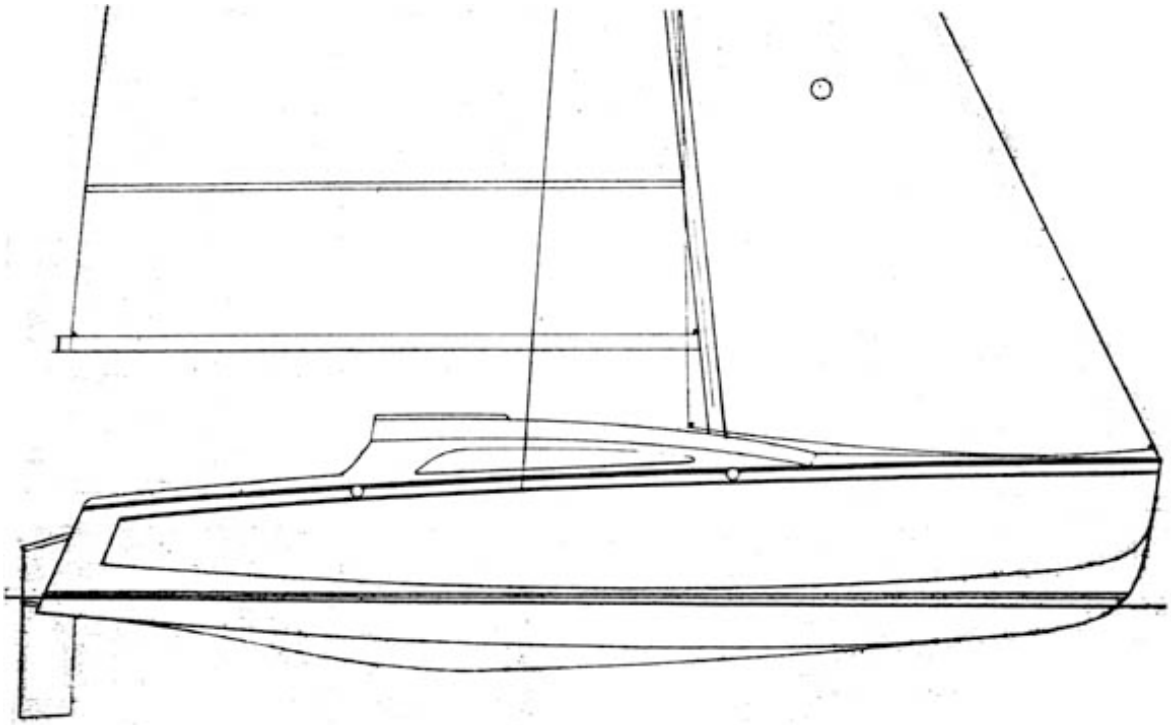

Above and opposite: Jim Young designed folding Micro-multihull trimaran

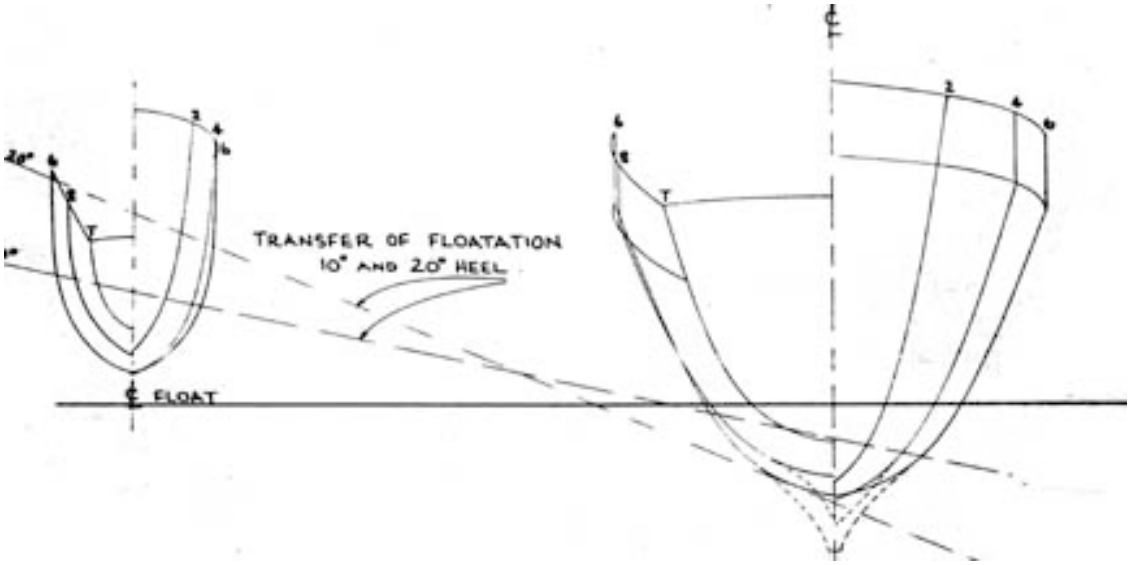

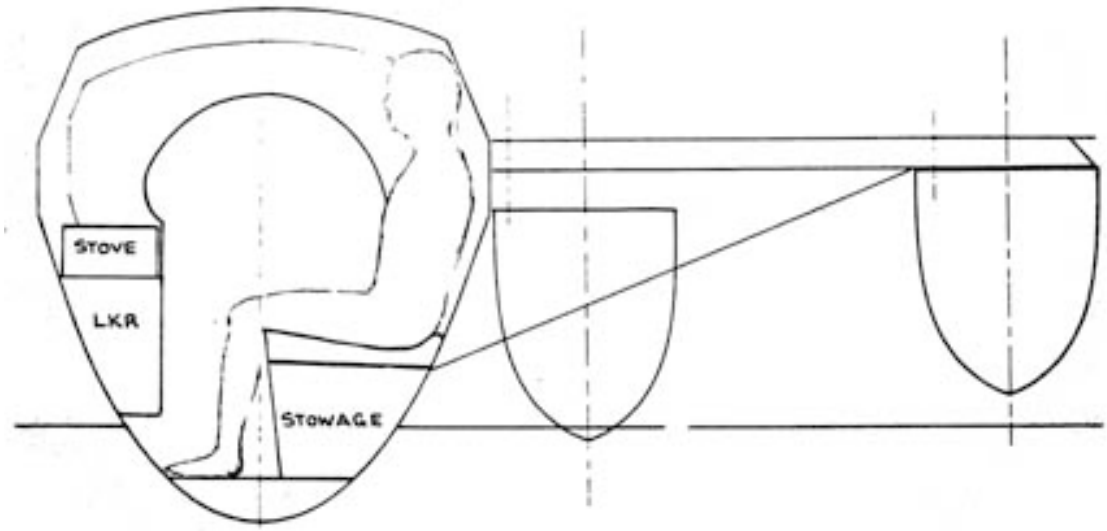

Baigent: What I meant was, since you can't lift your new foils, how do you handle shallow water?
Rhodes: Oh, they angle almost horizontally when the boat is heeled, well above the draft of the hull.
Baigent: Jim (Young) says he has to shoot through in a moment so we'll skip a few and tear his design to pieces instead.
Young: I was hoping to get out of that. Well, whoever drew this design was trying to impress everyone. The tri is heeling over, looks like it is pointing high, sailing fast and close to the wind.
Rhodes: To me, it gives the impression that it heels over.
Young: Oh, it does, does it? Hmmm.
Tennant: To me, because I make wide boats, that looks real narrow.
Young: Yes, well the reason for that is because I was under the impression that the rule meant the boat had to be trailerable. In my book, demountable doesn't constitute a

trailerable boat so that is why there is a limitation on the beam of this design. In fact this boat folds, down to a little over 8 feet.
Tennant: So it's basically the geometry of folding the boat that dictates your boat's beam.
Rhodes: It's very much like Farrier's Trailer tri. If you want more beam, you can't because it folds the beam up high on the trailer.
Young: One of the things that struck me with the Micro multihull rule is that you have a certain Bruce Number with an empty boat and another when you add a crew. From my calculations a boat weighing 700 lbs. and another weighing 1400, the addition of three crew to the lighter boat affects the Bruce Number by 15% whereas the heavier boat is only reduced by 7%. So there was obviously a small advantage in having a boat with more weight and more sail.
However the displacement/length ratio was going to increase so that the heavier boat made more waves and therefore reduced speed. The general relationship of sail area to lateral plane on a keeler seems to be 30 sq. ft. of sail to 1 sq. ft. of keel area so the total area of my long fairing keel matches that of a keeler. However I feel that there isn't quite enough lateral plane area looking at the drawing at the moment. But as the boat heels and depresses the float, it transfers what it loses in the main hull into the float. It will also gather speed so the lateral plane will become more efficient, therefore requiring less area.
Fuller: I don't know of any boat that depends on the lateral plane type of float to be efficient to windward at all. And some of the older designs that had plenty of lateral plane, are very poor performers in this respect. Whenever the owners of these boats have added boards, either centre or dagger versions, the improvement has been dramatic. There is another way out of this problem and that is to fit a horizontal board like the wings on Australia 11's 12 metre America's Cup keel, to the long skeg. This provides an end plate and the result is that they work wonders. Dave Moore has done this to his cruising cat and made its performance to windward far better than before. On the other hand, Ken May in the UK tried this

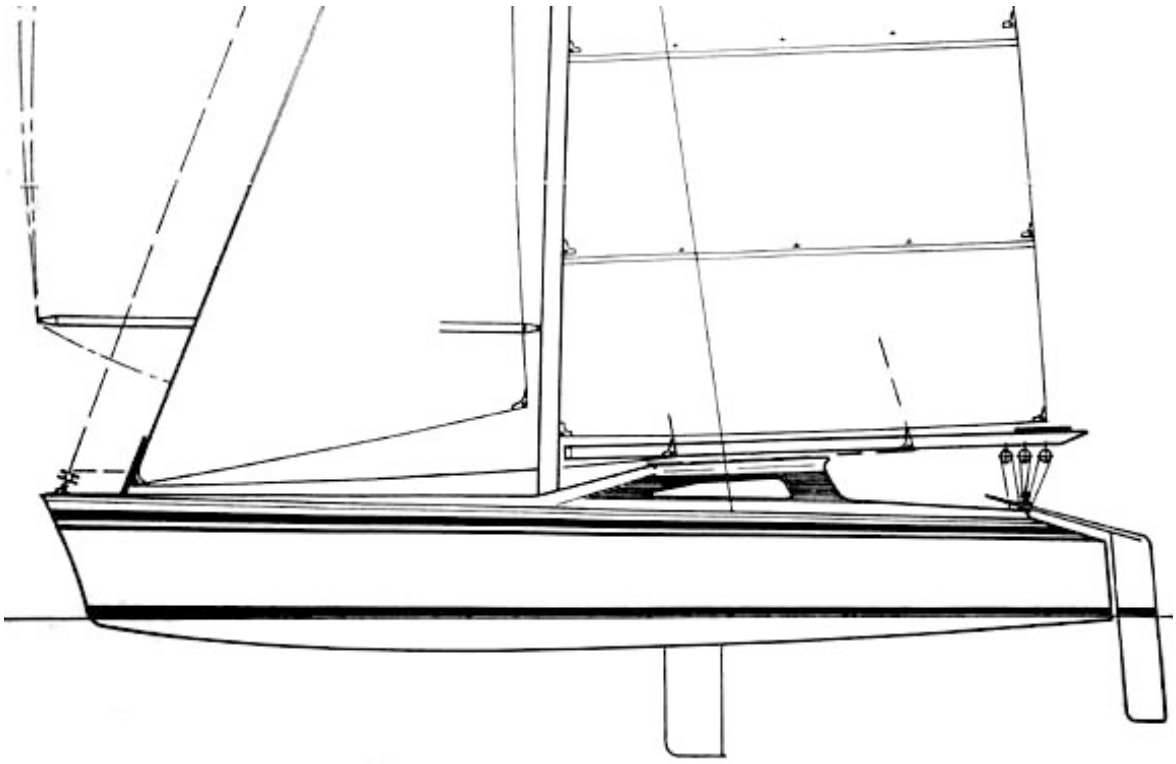

Above and opposite: Ron Given designed catamaran

approach on his Tornado and couldn't notice any difference whatsoever.
Given: All I tried to do with my boat was maximize the waterline and overall length and hollow the bows - the boat, as a result is probably considered big by some peoples' standards. But I'm a great believer in having plenty of buoyancy in the ends of the hulls. I enjoy sailing a catamaran fast and safe in heavy weather while in lighter conditions, I compensate for the extra wetted surface area by adding large reachers or spinnakers. That is where the contention is now, how big an extra are you allowed on the boat? Apart from that my design is nothing special. I tried rotating spreaders on the mast and kept height of the rig low, although there is plenty of roach there to gain area.
Young: One of the biggest problems with fully battened mains is that they get inside out in light weather.
Given: Recently I had the pleasure of sailing to, and returning from the Bay of Islands on Dave Barker's new Sundreamer. It's the first time I've sailed with a big, fully battened mainsail that had no full length batten in the foot. I am absolutely convinced I'll never have a full length batten there again. It was just so much easier to control the draft of the sail in the light.
Baigent: We went that way on Supplejack when we broke the bottom batten and pulled it out, found it unnecessary and left it that way.
Given: The beam to length ratio on this design is only 12/1 and I've kept the hull fairly flat in the after sections to stop the stern sinking with crew weight and when you are reaching fast.
Young: I reckon on a boat that size you can move the crew forward to bring the stern up.
Baigent: You can do that on any boat, I mean, you can do that on 58 foot Sundreamer.
Tennant: Variable prismatic coefficient according to Lex Nicol.
Given: It's surprising that the Tennant and Given boats are so similar in weight and a lot of other things. I've got 1050 lbs. while Spyder is 1025 lbs. And that is working on the normal materials we would use for these designs. I have a slightly lower

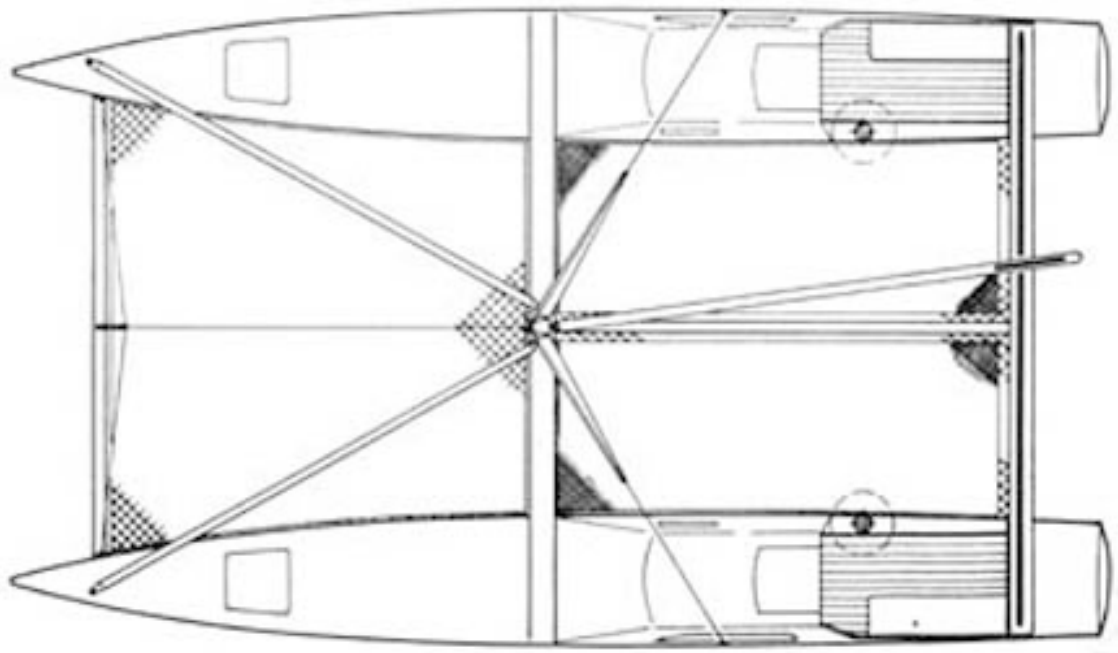

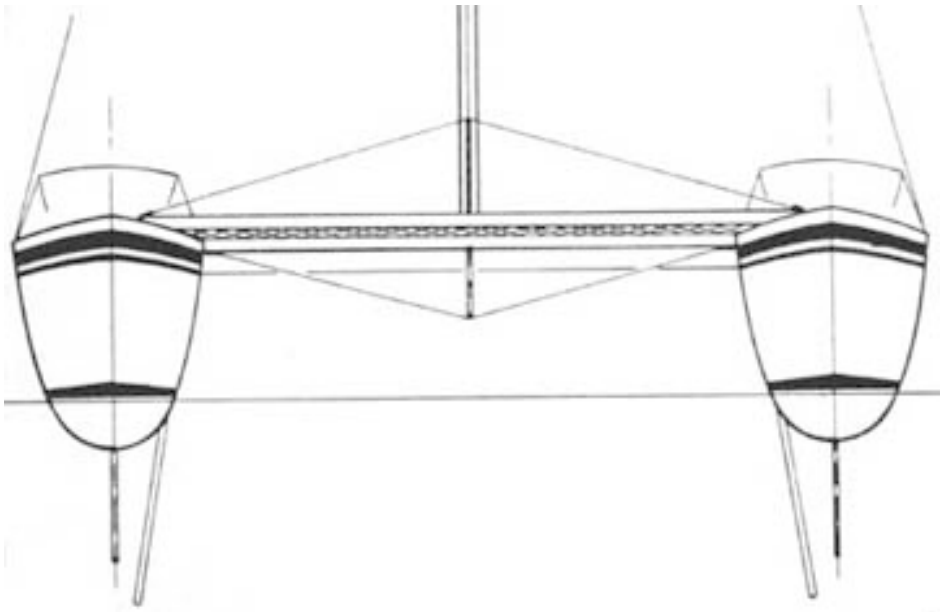

Given catamaran with slightly angled boards

wooded boat and therefore the cabin is not so pretty, that's because I worry about windage so I keep the general freeboard down. So the cabin had to go up to make the minimum headroom figure. I have also drawn an airfoil mast for this boat, not a very big one; it's about 15% of the sail – but I haven't got it finished.

Baigent: My design (above, right) follows my usual manner, that is stripping everything down to the bare bones to keep weight down. To make a foiled trimaran work I believe you have to have a skeletal boat – so this boat is down to the minimum weight. If you can't afford exotic materials in the construction then the only way out is to reduce surface area and build in thin, tensioned or compounded plywood. I guess the most unusual thing, aside from spareness, is the single main beam that slopes forward and the semi-circular daggerboard foils in the floats. These curved foils fit through similarly designed cases. If you want to reduce surface area in light winds, then it is quite safe to go out on the floats and lift the them a bit. They then become more vertical but looking at the drawing now, the boat would also need a daggerboard in the main hull, probably set to one side to maintain the already mean accommodation. If the foils were straight and angled at 40-45 degrees inwards, you would be in a similar situation to that of the Seawind 24.

Rhodes: By having only one beam to your floats you are going to get oscillation and twisting moments, especially with your fairly long floats.

Baigent: Well the floats are very fine, although long but the rectangular box beam will be stiff, perhaps I will have to add some angled struts from thee beam ends to the floats to counter that.

Tennant: Like Gautier IV has.

Baigent: The reason the beam slopes forward is to get the foils in line with the beam to take the loads vertically. At the same time this places the lifting foils well forward and keeps the nose high. Plus the angled beam reduces torsion moments.

Fuller: Is this a foil stabilized yacht.

Baigent: No, I've aimed at two worlds. There is an inverted T foil on the rudder, like Bernie has on Klis, to lift the stern so I am hoping in a good breeze, the boat will become almost foil borne. The longish floats will support the boat in light weather like a conventional

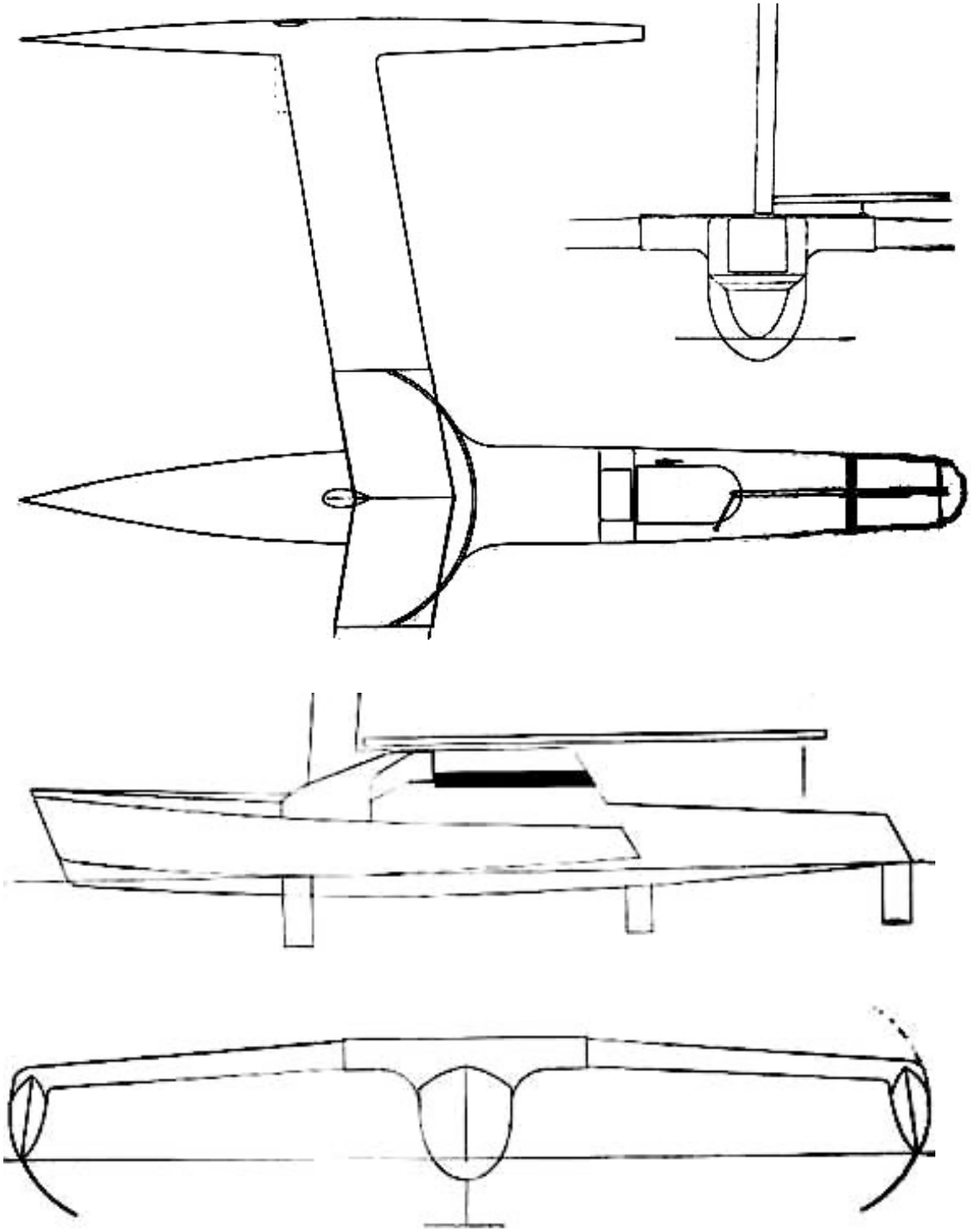

Baigent designed hydrofoil trimaran with curved float foils

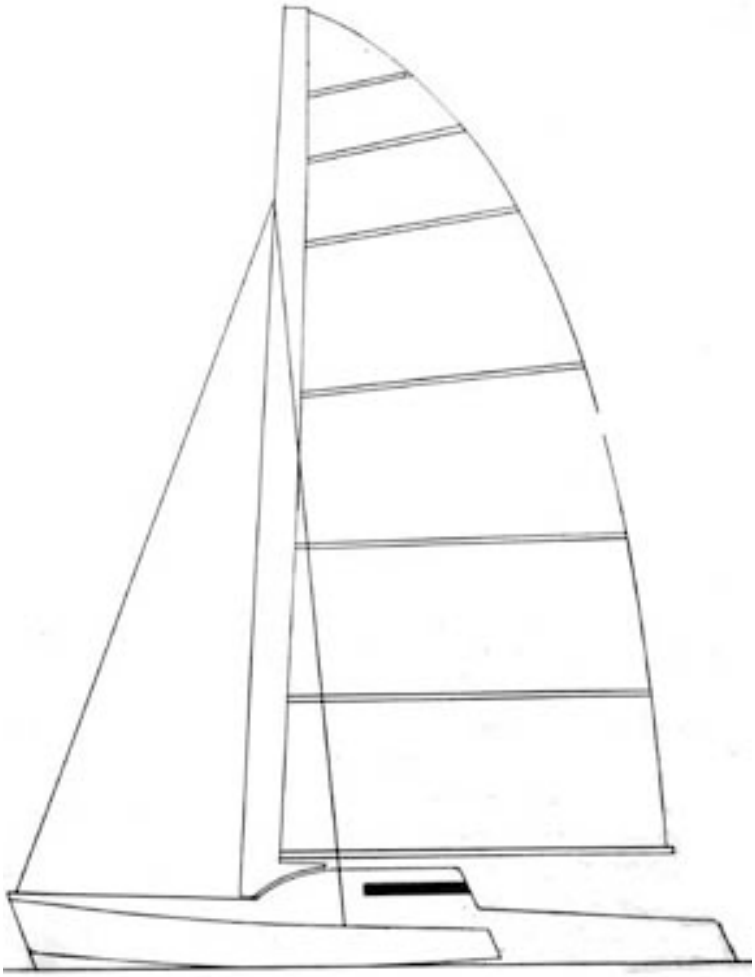

Baigent foiler with una rig – opposite: Jim Keogh designed Micro-multihull proa

trimaran, that is with the foils lifted a fair amount. I must admit it is still a bit of a dream but my idea was to try the boat and alter things where necessary.
Rhodes: Have you calculated the area the foils require to lift the boat.
Baigent: No, I've just observed how little foil is needed on Leon Talaic's Mish, in the speed trials, how little foil area was required to keep it flying at 10-11 knots.
Young: It looks to me that Flash Harry will go too fast for its own good.
Keogh: My boat is the most conservative in the show and is a modern version of a traditional form and in my opinion, the only rightable multihull here. It takes a while for the European mind to encompass the method of using the boat.
When tacking, shunting, it is not necessary to describe a curve as shown in diagrams of going about in proas. You can actually change the sail on the
tack without coming to a stop. By leaving the outrigger in the water on putting the helm over, the boat will spin practically on its own length and back onto the new tack. Although in unpracticed hands it can be a relatively hairy manoeuvre, you've got more control than people think. You have a ot of options where the sail is placed because the boom can swing right out over the bow.
The only disadvantage is being caught in a luffing duel with another boat. If you lose you could capsize by being caught aback. In my experience with a 16 foot outrigger was, when we went did go over, I found myself sandwiched between the outrigger arms and the sail itself.

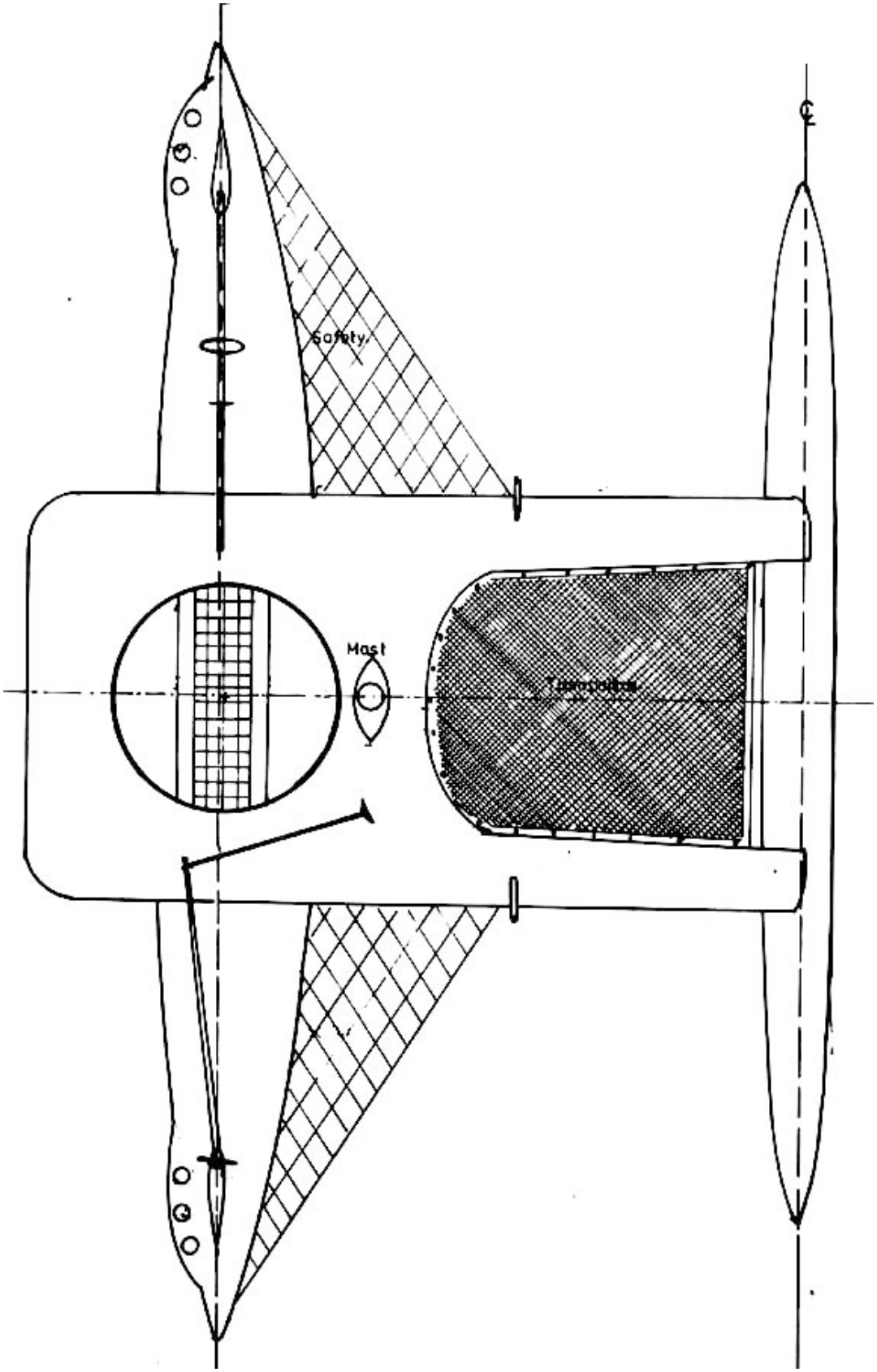
Safety
Mast
Turntable

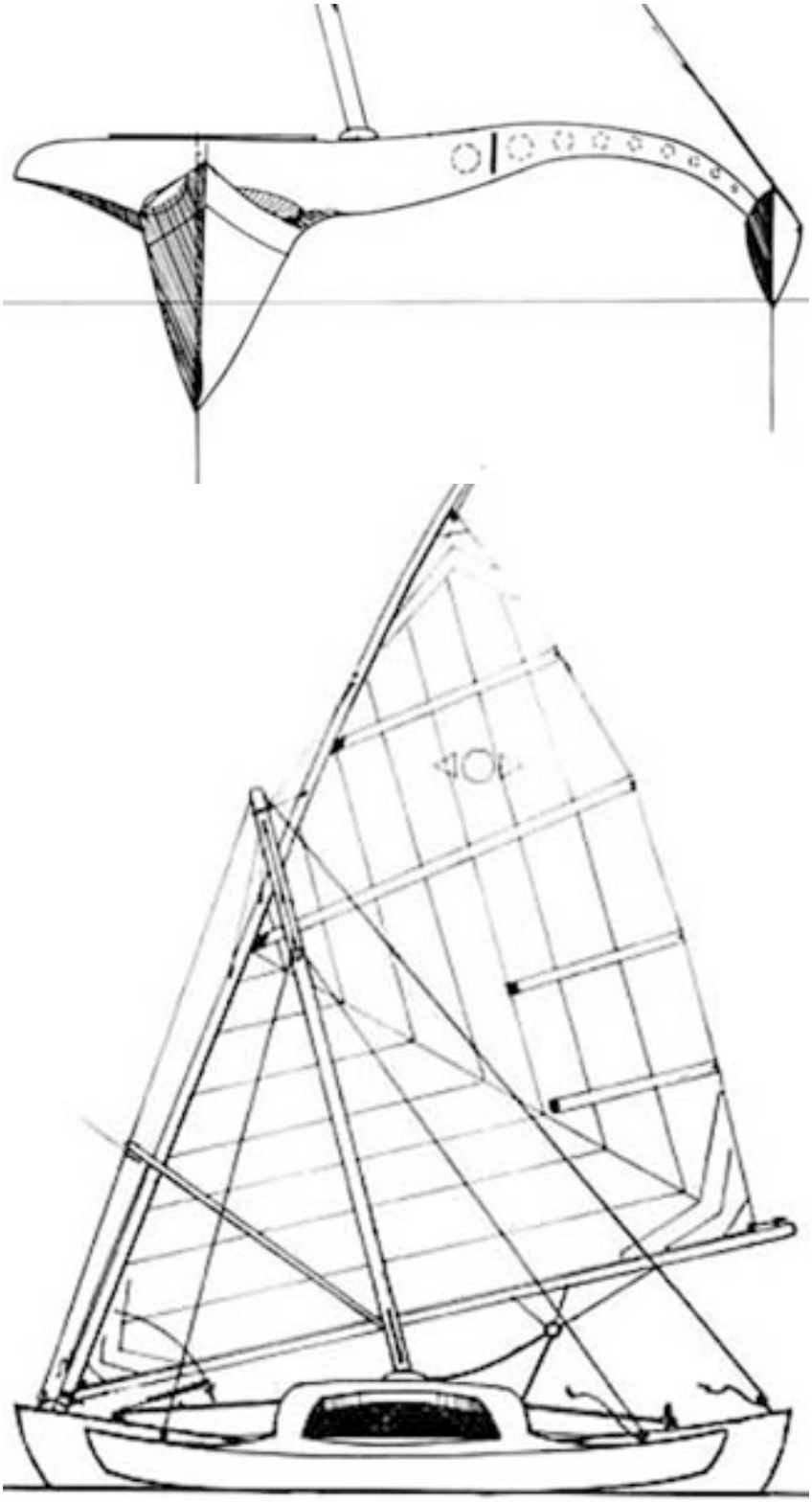

Keogh designed proa

In that situation I usually panic but fortunately on that occasion I was able to control myself. (laughter) The idea is during a capsize, is that the outrigger arm and the ama plus the cockpit area itself, in this boat displayed here, is supposed to be flooded. The hull accommodation area is sealed in bad weather, just like the Polynesians did and there is a one-way valve in the cockpit which will drain this area as the flotation raises the boat. Generally I have found the rig to lie across the outrigger arms in this situation and then it is a simple matter to reinstate the rig after the boat comes upright. There are two cramped births near the cockpit, one on the counterbalancing arm and one on the outrigger area. People are forced to sleep there according to the weather, towards the outrigger if it is heavy and towards the balancing arm in the light.
Given: Ray Beale is another monohull designer having a go and that is to his credit. To me the trimaran is the more attractive design and it is, as you would expect, along pretty conventional lines.
Baigent: The only thing that stands out as being incorrect is that the bow sections of the floats are too low on the trimaran.
Given: Although the float gunwhales are horizontal, which is unusual, it almost looks like there is a reverse sheer on his floats which is generally accepted now, to be not a good thing. Like his keel boat designs, both the cat and the tri here carry a lot of sail so their displacement must be quite high. All in all they appear to be pretty sound boats but nothing out of the ordinary, but a brave effort all the same.

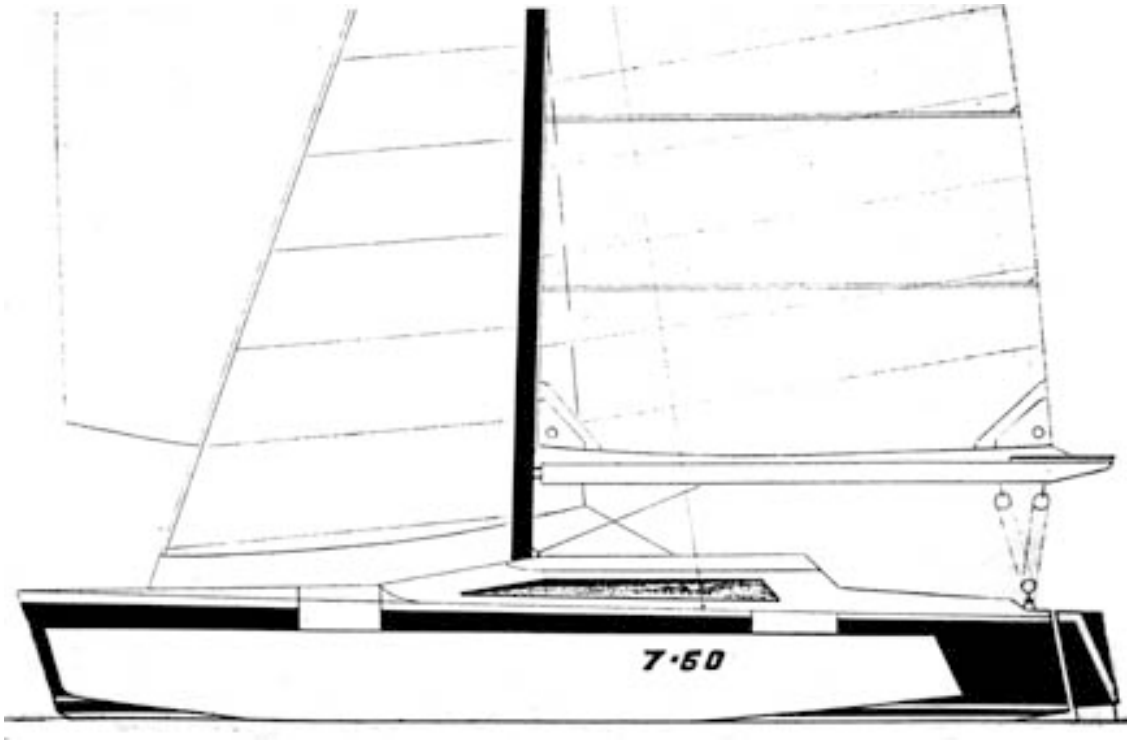

Ray Beale designed trimaran

New Zealand Lightweight Yacht Construction

People present at Richmond Yacht Club, September 28 1983:
Alf Lock, Jim Young, Ron Given, Gordon Miller, Chris Barker, Ian Swinton, Brett de Their, Dave Tapper, Mike Hayes, Arnie Duckworth, Richard Honey, Colin Palmer, Paul Schofield, Chris Timms, Gary Baigent.

Duckworth: I kind of came into the back of this project here. I must admit I don't have all the details on the background of the Micro-multihull but I gather that weight is perhaps not so critical as it might be on the other yacht classes.
But anyway, of the materials that can be used, the method of building separate designs is going to be a consideration. I still think that compounded ply is a good, fast way of getting a shape. And it's probably not the worst form of construction in terms of considering specific mechanical properties. For example, tortured ply Tornadoes are still as good as anything else they've come up with, including the latest multihulls and their building methods, they're still competitive and still win their share of races.
Schofield: Give us time. (laughter)
Duckworth: Speaking of honeycombs on the other hand, a lot of honeycomb structures that have been used on the 18 footers have not been entirely successful
either. I don't think any of those boats have gone through more than one season without major structural repairs and the weight of them is not really all that light either. Also they find it hard to keep the water out.
A phenomenon that you get with honeycomb is that sometime or other you get a little later in there. Now there is an area of negative pressure and any pressure that you may have in the laminate is a very strong force, it sucks the water through and
this results in forcing the skins off the honeycomb.
Back to ply, a few tricks with this system would be to use foam or balsa to reinforce the shapes and then add a last laminate to it. You could place foam or balsa on the

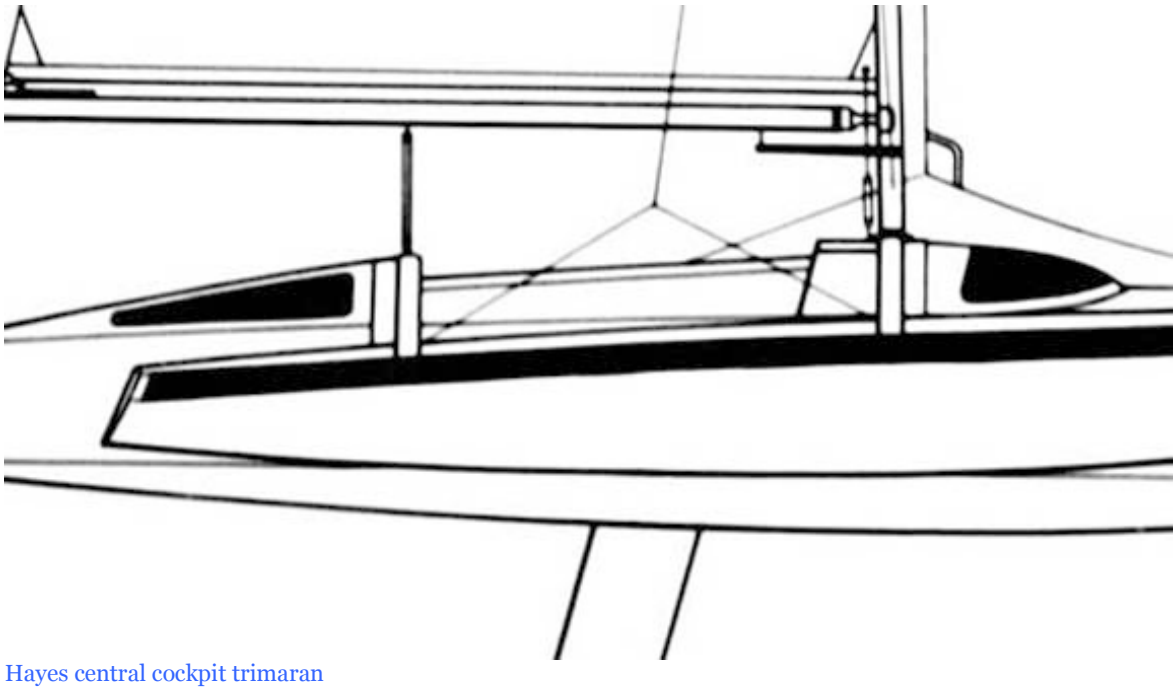

Hayes central cockpit trimaran

outside or the inside and then add the laminate to give a strong hull.
Probably it would be difficult to get down to very low weights with this approach because when you combine light materials together, plus some glue lines, it all adds up to something heavier than what was intended.
Palmer: It sounds like the form of construction with the most appeal to the backyard builder would be tortured ply, rather than the complications of honeycomb and the like.
Duckworth: Well, a good professional set up can work effectively with tortured ply too. You get jigged up, you can knock tortured ply boats out pretty quick. The only disadvantage is that they have to be hand finished.
Honey: In other words, the foam or the balsa, the low density material, acts as a stiffener in place of normal wooden stringers and frames and the like.
Duckworth: Yes, he normal way - actually Chris Timms has just walked in, he's probably the expert in this method, I'm just suggesting that tortured ply is one practical way of building a light multihull. You can reinforce it traditionally as they do with Tornadoes with lots of little sticks but alternatively, you could find other ways with honeycombs, foam or balsa on the inside. Foam has to be good, no question about that. The most experienced and prolific multihull builder that I know would be Geof Cruise in Queensland who builds Crowther boats and others. He does all the female mould, foam boats and I believe he uses only one layer of Kevlar each side of the foam. He finds it more economical to build with Kevlar rather than glass because he can make the structure with one layer rather than two. This saves the cost of extra material and saves labour. He works in epoxies, his boats have good reputations, stand up well and are built to weigh close to ½ lb. per sq.ft.
Young: Does he use a gel coat and put the Kevlar onto that, build from the outside in?
Duckworth: I don't think he uses a gel coat, just epoxy against the mould.
Honey: Half a pound per square foot, what type of boat is he building?
Duckworth: Lock Crowther Super Shockwave catamarans.
Young: Does he have any trouble with printout?
Duckworth: He post cures them.
Honey The cloth would be very fine, not like heavy woven rovings.
Young: How does he get past the problems at the joins with this method?
Honey: If you haven't got an overlap between the cloth, you tend to get resin running down the gap between the two but there are various techniques, such as thixotropic filler mixes which are used, smeared onto this area. If there was a bubble, an air bubble that in the normal sense of boat building would be a weak spot, remember the boat comes out and it isn't an air bubble between the layer and gel coat, it's just a bubble which will be seen from the outside and filled in before the hull is painted.
Duckworth: Certainly there is no problem making thixotropic materials and using it on the laminates where necessary.
I guess the cedar and other medium density timbers used in strip plank form, laminated on both sides with glass, Kevlar or even carbon fibre is the other alternative open to the home builder. Carbon is looking to become more and more practical, the price is certainly getting lower, becoming more realistic, for example, you could do a Young Rocket 31 hull for $4000 in this material whereas with glass it would cost $3000 in addition to the other materials. Carbon combinations with wood are looking very attractive.
Albert Ryder, who built the booms for Australia 11, built them with solid carbon top and bottom wit carbon sandwich in the sidewalls. He used wood veneers plus and minus 45 degrees around the sidewalls and this timber did a number of things: it increased the density behind the laminates and provided a hard backing for the carbon while also increasing the damage tolerance by giving this backup density.
Another thing we have been looking at recently and I must admit, we entered into it with some reservations but I'm optimistic that it will be quite successful, and that is the use of

planked balsa wood used in the same way as planked cedar is used here. It has the principal advantages of cedar, but is lighter, and you are getting a mechanical contribution to form your core. When you start talking about light panel weights, the core weight, as light as it may be, inevitably becomes a significant proportion of the combined weight of your structure. And if you are not getting a mechanical contribution from your core, then that is weight from which you are not getting a return. Timber will provide a substantial contribution in mechanical properties, the resin absorption is also lower but probably the most significant thing is the overall elongation of the panel. You can consider a panel in two ways, in stiffness and its ability to resist hydro-dynamic loads, and the other is its ability to resist loads on edge. So far the balsa, because of its low density, can be made thicker to increase section modulus substantially.

Julian Bethwaite has built an18 footer in Australia that weighs 100 lbs. – built in 10 mm balsa with one layer of balanced 4.5 ox S glass either side. The boat is decked halfway back and the cockpit is largely supported by tanks. It's a two man boat and therefore of a different configuration to the other 18's, it is smaller and the rig is different too so all the weight savings have not been solely from the materials in the hull but it is 80 lbs. lighter than Tia Maria, 40% less.

Tia Maria is a carbon/Nomex third generation boat and it still has problems. Each year these boat types have been built, they break and have been reinforced but they are still breaking at that weight. So who knows, the two man balsa boat isn't over that problem either but it has been taken to the USA and sailed in five races on San Francisco Bay which were survival conditions. They didn't finish any of the races but neither did they break their hull. They took it to Kingston where they beat Tia Maria by five minutes in two races and got pretty consistent seconds in Newport after that. Iain Murray got in it and sailed against Peter Sorenson beating him decisively so generally, everyone's opinion is that the balsa boat Prime is faster than Tia Maria – but then that may be a function of many things.

Now there is a 40 foot Crowther racing trimaran being built in Queensland by Ian Johnston and Cathy Hawkins. This boat is planked western red cedar below waterline on the main hull while everything else is balsa.

Honey: What is the density of balsa?

Duckworth: It varies quite a lot. You can sort through the various densities picking the planks for different areas of your hull, the less dense where loads are lower, the more dense where they are higher. Variation is between six and eight pounds per square foot. We haven't got much stuff over 10 feet in length but what some people are doing is cutting it up shorter and gluing it back anyway. Believe it or not, you can butt glue it, end to end and it rarely breaks at the joint.

Honey: You tend to reinforce the butt and stop leakage into the wood.

Lock: What about the peel strength between the skin and the face of the balsa?

Duckworth: Right. That is potentially one of the concerns but probably the guy who has done the most work on this so far is Ian Johnston. He's obviously got the most to lose so he's done the most destructive testing and he's found that by really sanding it thoroughly with 40 grit paper, he has been able to get an excellent bond.

Lock: For arguments sake, if you have a fast multihull speeding downwind and it clobbers a wooden beer carton, you could well develop a high pressure area on the impact zone and bounce the laminate off.

Duckworth: It certainly has happened with motor boats but it's a problem to some other bearing. Anyway Johnston has found he can get failure between the epoxy and the glass. And that's a bit of a one eyed comment because the peel strength of a hard epoxy building system is practically zero.

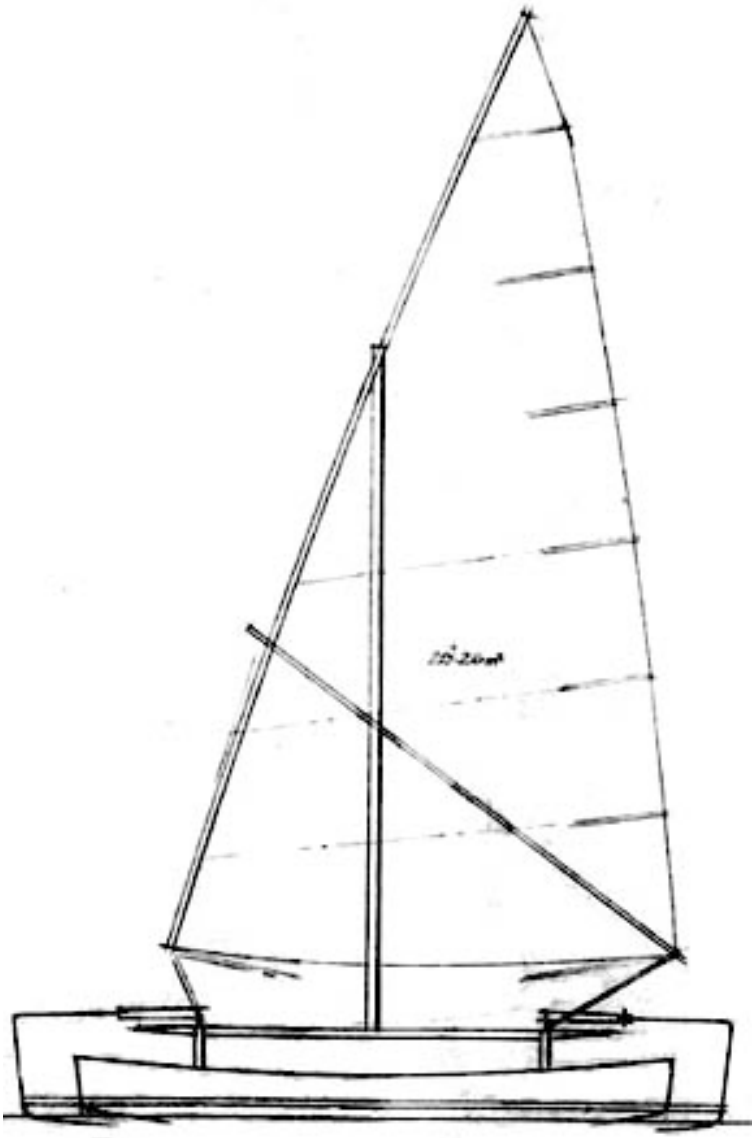

Inclining rig on Ian Swinton proa

Young: What about a very strong, narrow reinforcing system like Kevlar and balsa. What about the pressure face?
Duckworth: It's a conceptual problem. Although balsa, some of the lower density pieces are quite soft, it is still pretty stiff, it's still pretty stiff, its modulus is quite high and so far, in the limited amount of testing we have done, it seems to hold reasonably well in compression and tension.
Young: What fails first, the pressure face or the tension face?
Duckworth: It depends on the nature of the test, depends on the way you load it.
Honey: In three point bending, as well as the compression, the panel beig bent, for all this compression background, you've got a very high localized mode just there, and it's not so much as the compression strength in place with the glass or balsa backing, it's the compression strength across the grain – because there you tend to crush the balsa cross grain, that can cause failure.
Young: What fails first, the pressure face or the tension face?

Duckworth: It depends on the nature of the test, depends on the way you load it.
Honey: In three point bending, as well as the compression, the panel being bent, for all this compression background, you've got a very high localized mode just there, and it's not so much as the compression strength in place with the glass or balsa backing, it's the compression strength across the grain – because there you tend to crush the balsa cross grain and that can cause failure.
Young: It happens with balsa but not a piece of timber.
Honey: If you could hold the material at the ends and bend it, so you're getting pure bending on it, which is more what you're getting in a sailing situation in large waves for instance .....
Young: Yeah, yeah, you're actually bending it at the ends so it won't bend.
Duckworth: If you take it and push it until it goes out of column.....
Honey: I'm not talking about column bending. In a three point test you tend to have very high point loads, which are not representing slamming into a whale or heavy wave pressure. Setting up water pressure tests is not easy.
Young: You can also get point load failings such as when you slam into wave on the other side of the panel.

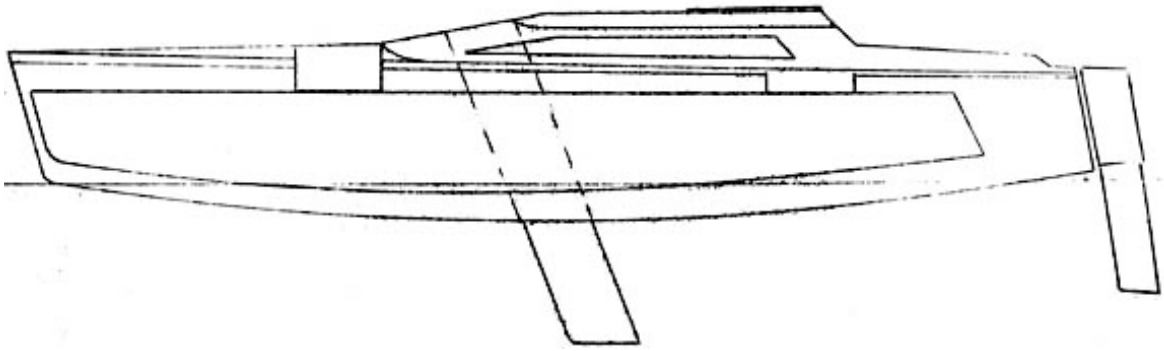

Beale trimaran underwater foils

Honey: Yes, on the other side. If you beef up the inside of your bulkheads, so you haven't got point loading there, and you've got a water pressure load, a general pressure load, I think you'll still find the compression side will fail before the tension fails. It could be, if the skin is thin enough, it will buckle, either away or into the core. If it wants to buckle away from the core, it's the cross grain tensile strength at the core, in other words, it will be able to peel or buckle, pull itself off.
If it wants to buckle into the core, it's the cross grain compression strength. I think you'll find the cross grain compression strength of the balsa is higher than its tensile strength, so it will want to buckle away. But it doesn't want to buckle away because the water pressure is pushing inwards – so then you may get an intermediate failure in the cloth weave.
But if you've got a uni-directional material that is very flat and the glass is very fine, it will want to hold together because the fibres are straight. It may not want to buckle, such as a heavy crimped material would, because it is the bends in the material that tend to cause failure.
But I think you will find on this business of strength on which will fail first, because of balsa's low density and very high section modulus giving you very high stiffness, in actual fact, strength is probably of minor concern – it's a secondary failure such as crashing into something that will be your concern.
We find when we look into foam laminates with glass that the criteria for durability is what you can survive when you bump into something. One layer of 4.5 oz S glass outside of balsa say, push it, it's stiff, bend the hull, it's still stiff, drop it onto a trailer, it will hole. If you're only worrying about sailing, you can build very light and it will withstand the loadings. With

foam sandwich laminates you can use incredibly thin skins on incredibly low density foams and still have enough properties for safeness. But the durability is lacking. And that is why wood skins like in moulded plies outside of a low density sandwich, are good. When you hit something this higher density outer layer acts independently from the whole panel, protecting it from impact. But of course, you can't really design these yachts to take hitting rocks. Owners will have their own criteria in what sort of damage they can tolerate. Some people will have a kid gloves approach; others will want something more robust.
Lock: My original idea of a questionnaire would still be valid. What do you all prefer, what sort of construction, what are your preferred skills, what do you require in your materials? You may find an overwhelming tendency from people who are interested in this particular yacht, a particular type of material.
Baigent: They'd use the stuff that they know.
Lock: Yeah, but it's like I said originally; horses for courses and boilermakers will opt for heavy steel construction while a guy who makes footpaths will gravitate to cement. (laughter) The whole concept of this yacht, as I see it, you're dealing with a rule configuration that doesn't unduly favour any one aspect of yacht construction, doesn't over-emphasize the super lights.
Duckworth: Well we're supposed to be the experts and should put forward ideas on what the pros and cons are on the various types of construction. Maybe we should talk a little about that. I agree entirely with Richard Honey's concept of the ultimate form of construction being one that involves a thin, high density outer and inner surface, through a medium density sub strata and then into a low density core material.
The practicality is another consideration. I've done a lot with sailboards involving this type of construction and custom built sailboards are usually made from low density urethane or styrene foam, shaped and then laminated with glass. That's a classic situation where you've got a high density/low density combination of materials and the developed boards are either a bit too heavy or they're nice and light, surface is strong enough to take the bending loads but they're not so durable.
In a situation like that, a veneer with light 2 oz. cloth results in strength of say, two layers of cloth. That is exactly what Richard Honey has described where you've got bending stiffness in the skin itself irrespective of the whole sandwich structure.
That is something worth considering for someone who wants the ultimate in terms of light, stiff and durable construction – but it may not be the easiest way to build.
A tortured ply boat reinforced on the inside with foam or balsa, would be a very strong boat

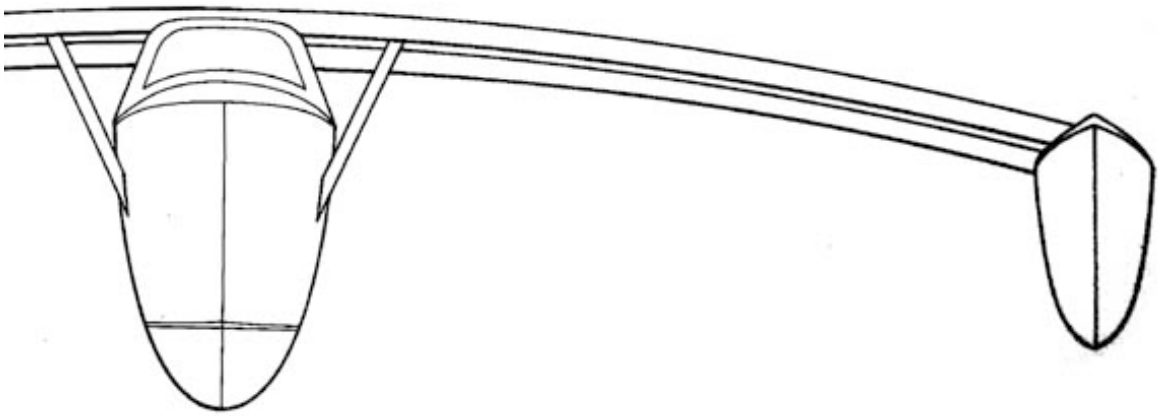

Bow view of slim hulled Hayes trimaran

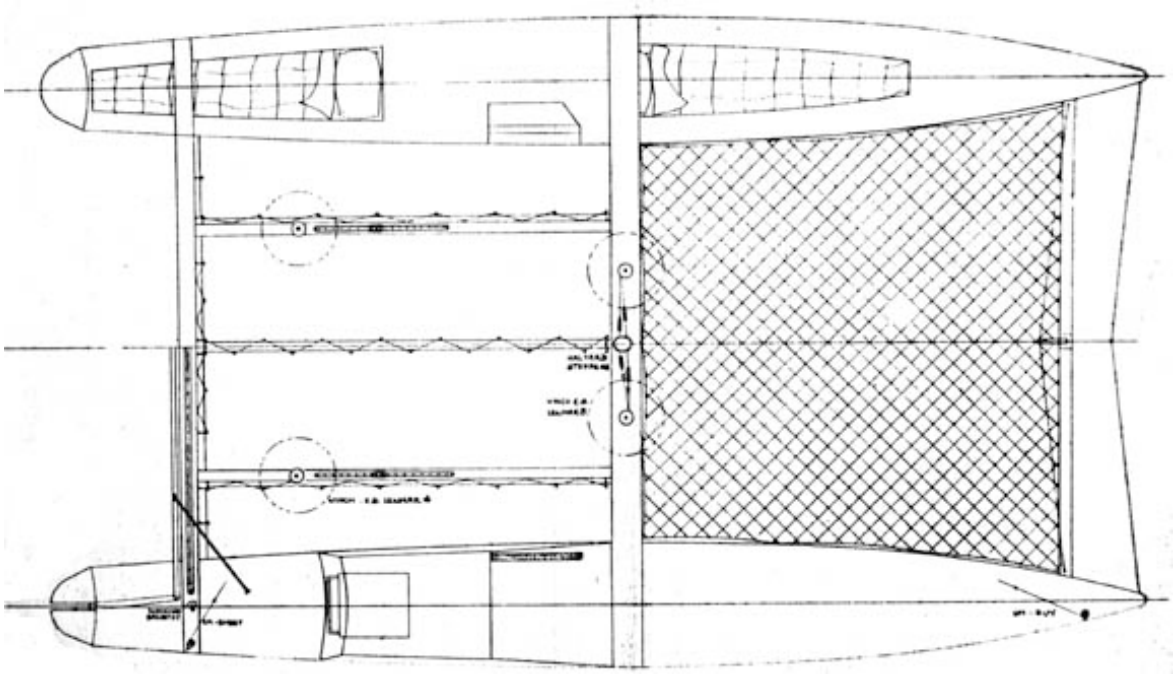

Richard Woods catamaran

in terms of durability but it wouldn't be as light as the other construction method. But it could be still practical and competitive.
Hayes: It could be quite good for the inexperienced bloke because it's probably easier to do.
Timms: We're right now building another Tornado and it's absolutely amazing, in this case we know what we're trying to build, a shape that is well known.
Duckworth: What number have you built now?
Timms: This is our sixth boat, twelve hulls. (laughter) If you're building the same boat, so we've had some practice and now, they're so bloody easy to build it's bordering on the ridiculous. It takes three days to get your hull, all glassed up, the right shape, damned near fair and that's three half days really. The bone with this method is that, although I'm not bright enough to figure out how to do it and get a boat to a particular shape, it is possible to build a hull of many differing shapes. Projecting a curve, a curved shape is really quite tricky and I think you've got to do it by trial and error.
The only way I can recommend to anyone building fold-up boats is, get your shape and then, by shaving off bits here and there, steaming and compressing plus some strutting, you can get very close to the type of shape you want.
Duckworth: There's a very good chapter in the Gougeon's book on designing compound boats. They basically say the same thing, you take an educated guess and build your model.
Miller: It doesn't work out hat you can simply grab a sheet of ply and get the same shape every time. For instance, if you take Fijian kauri, which has got three equal proportions, and then you get Australian kauri which has got two thin and one thick ..... I can make a dinghy shape with the Australian but you can't fold the Fijian. It will snap down the middle every time.
Timms: At the same time, if you build one, it's not too difficult to fair that up and then build female frames. Then on your next hull, if it isn't quite the right shape, you can put it into the female frames and push it around until it is correct.
Lock: You only need a slight difference in the density of some sheets and get compression higher on the inside than on the out, a shift in the neutral axis once it's bent, and then you've

got the sort of thing you're talking about. But with female frames, you can always jump on it more or less, make it go right.
Timms: When we first started building fold up Tornadoes, we achieved some horrible results purely because we didn't know what we were looking for. If the directions said, "put a bulkhead in there," we pushed it down, forced it in and what did we get? – when it came out of the jig there was a bloody great ridge where the bulkhead had been forced into the hull. (laughter) Then we got a little bit smarter – you realize you don't need to push bulkheads hard down, you just slip them in gently, trim a little here, bog it a little there, little dodges like that make all the difference.
Duckworth: The other argument that can be put forward is that multihull-type shapes, because they have 15 to 20 to 1 ratios, they all go like stink no matter what they do, you're hard pressed to make a bad one.
Schofield: Don't you believe it. (laughter)
Timms: It does pay to go to a slightly thinner plywood because it bens easier. You'll find as you approach paper thickness, there is a tendency for it to fold up the wrong way. To get it fair you have to put more structure on the inside, veneers or foam and that is not a bad way to get your right shape.
Miller: Another thing I do with my boats, to get more fullness in the bows, I lay epoxy on the inside before it's folded up. This makes it belly more in the forward sections, which is

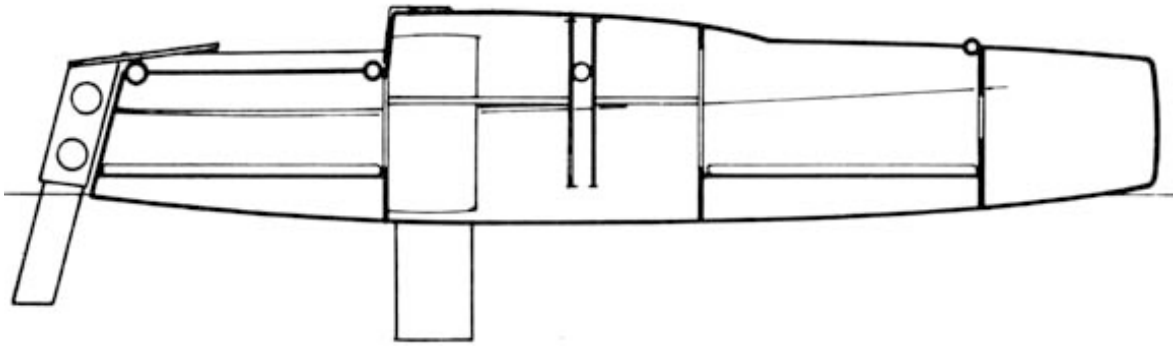

Sedlmayer catamaran interior

what you need.
Timms: I've struck a few people building compound dinghies who have put epoxy on both sides and have found they couldn't bend it at all. (laughter)
Given: It is probably alright to do what Chris Timms did with the Tornado shape but while we are talking about stressed ply boats, I've always believed that the strength of the Tornado was gained by having a nice, deep foam sub-deck, if that's the correct name for it, that provides support across the hull at a specific height.
Now if we are talking about Micro-multihulls, you can't have these things inside because we have X amount of room for a start. Therefore you are going to be restricted where you put these supports across and will probably have to settle for getting reinforcement in the skin itself. I presume you can do that later of course.
Duckworth: You have that choice. If you're building a trimaran with room in the main hull, you can use a sandwich construction while for the floats, you can go to the supported skin structure like the Tornado.
Palmer: We haven't really mentioned a lot about strip planked versions. My feelings are that if you're going to a light shell and then put some more reinforcing into it, you've lost the original concept which is something that is easy to produce.

The system of using fore and aft strip planking of medium density timber on temporary frames, is very fast and the amount of fairing work later is very low. Plus it isn't a high skill job. Also these multihulls require internal room and you are really having to look at a structural skin completely without, or with only small areas of local reinforcing. Initially most people building these boats- it's not going to instantly sell to every individual, there's going to be enthusiasts out there who are really keen, who know a little about them and who will want to produce something fairly good in terms of strength and weight.
For this particular class where there is quite a range of different weights and structures, the main advantage of building in light woods or foam, is building the thing very light. However with a medium density timber of 8mm, this can do more than an adequate job, maintaining a good stiffness and other properties while only having a small percentage weight gain over the light density core materials. You are still getting slightly under 1 lb. per sq. ft. plus having the added advantage of durability.
Duckworth: You mean it's not as good as balsa.
Palmer: Well, if you are building to a certain weight and a certain stiffness, you can achieve this quite readily with cheaper and more easily used medium density timbers. There is also less of a problem with water absorption with cedar.
Duckworth: In Australia we've been bonding the 3x2 balsa blanks together and then band sawing them into sheets. These sheets are then joined together and can be laid full length along a hull. That is what I intend to do with a Rocket 31 we are going to build in Sydney and it should be a fast method of construction. Jim (Young) however, has some reservations about balsa and would prefer it to be in kahikatea.
But this system would suit the Micro-multihull, however it would be advisable to glass the inside first to allow for easier fairing. Then later, the joints between the sheets can be taped on the inside after the outside has been faired and laminated.
Ian Johnston is writing a book on the construction of his own trimaran and so far, he has been very happy with the way the building has been going. My sole reservation with balsa is that you have got to keep the water out. If you don't, whether it rots or not, it's no good having water in there. The answer is liberal laminates with a number of light cloths. However, de Havilland Mosquito aircraft were built in the Second World War in balsa with inferior glues to what we have today, yet some of those aircraft have lasted the test of time well.
Honey: Have any of the designers done any calculations of what sort of weight they are expecting their boats to be built to, such as their bare hull panel weight, are we talking about under 1 lb. per sq. ft.?
Palmer: With a Bruce number I think that light weight construction has lost its significance. If you are having a waterline hull beam around 500-550 mm that will automatically be curved into a fairly stiff panel. It's only the topsides that you need worry about. So you are looking at, in terms of sailing loads, something that is fairly light. Durability comes from overdoing the glass laminate a little bit.
Lock: There needs to be a chart made suggesting the different options, beefy boats, this way, racy boats, that way sort of thing.
Hayes: Malcolm (Tennant) did some comparisons with Spyder between carbon fibre and Nomex to strip planked cedar and the weight difference was only 6%. If your boat is slightly heavier, this is automatically compensated for with the Bruce Number so you can put on more sail. It seems it would be better to carefully control the building of the boat, giving plenty of attention to detail, then you could make better weight saving to cost basis gains without going to the expense of exotics.
Honey: Gong to low density 10 or 12 mm foams for the weaker topside panels, one layer of Kevlar inside and you would get a panel weight down to ½ lb. per sq. ft. which is really significant compared to.85 lb. per sq. ft. But when you put in the interior framing to increase

the durability, you creep back up. If you aim for a durable panel of .85 to .90 lb. per sq. ft. with enough skin on the outside of the foam core to give you impact ability, it is going to be hard to sell. Then you will find that initial durability of a strip planked cedar core boat of .85 lb. will be higher than the foam sandwich .85 with very thin glass skins. But if you really hit something, in terms of ultimate failure between the two, it may result in the foam sandwich one benefiting more.

Hayes: For the class I think the criteria of 80% of the people interested will be, is it super cheap?

Palmer: The numbers for foams are excellent for strength, impact, whatever you like but their cost is obviously going to be somewhat more than other methods, even for one off constructions. They are still going to be heavy in terms of expense and man-hours but there is no doubt that if someone reaches the stage where there is a production or useable mould, then the foams are going to be an attractive medium.

Duckworth: There is another possible form of construction that could be very useful and that is sheets of balsa for the sides with foam used on the bottom. The tight round shape on the bottom enables you to easily use foam there and you've got the best advantages of having foam below the waterline. Then the sidewalls can be made in less expensive but stronger balsa. However, I don't think the balsa in sheet form would be substantially cheaper than foam.

Schofield: The stuff I'm playing with at the moment on sail planes is balsa. We've got balsa core aircraft that are in excess of ten years of age, some of them up to almost 20 and we've only just now starting to get problems that began showing in the last three or four years.

Duckworth: And today we are talking about more resin rich laminates than that used on the aircraft.

Hayes: Does anyone here know anything about constant camber panels?

Duckworth: There are three very impressive boats being built north of Sydney in Maitland. Two 42 footers and one 38, John Marples designed trimarans. They have a mould which is made in arcs, relatively short arcs transversely and longer radius arcs longitudinally. A rectangular mould 10 x 20 ft. is used and the boats are designed to be made out of panels which all come from this mould. The hull wings, decks and cabin tops all come from this too. The result is very fair boats, in three skins, vacuum moulded and because they are all made from arcs, the fitting of each plank is the same. So you can stack a bunch of planks in a row and fit them all together, then staple them in position. The next layer is stapled across only a couple of staples for location and then the final layer goes across those and the vacuum bag dropped on. I think the joints are just butted together and what you are doing in reality is making compounded ply. Finally, they are nice looking boats with characteristic hull shapes that are deep V's. There would be some limitations to the shapes that you can get but altering the angles of your laminates on the mould, some variations can be achieved.

Richard Honey from High Modulus Fabrics

White foam sandwich is not the cheapest way to build compared to plywood. It varies considerably depending on owners requirements: a carbon/Kevlar layup may be very expensive. By the same tken using a low density foam core and cheaper polyester resin, chop strand mat, woven roving reinforcements, could be very low cost construction. The difference in weight between the two laminates on a boat of around 45 square metres is around 80 – 90 kgs. In between these two extremes are numerous other alternatives. A reasonable laminate can be made in glass, vinylester resin and medium density core that will weigh 1 lb. per sq. ft. Use of Kevlar will drop weight to 0.8 lb. per sq. ft. but will increase cost. For the weight no concern builder, around 1.2 lb./ft2 can be achieved with polyester, low density core.

Note that the above examples are bare laminate weights. Extras such as paint, gunwhales and centerline reinforcement, stem and rudder fittings, unidirectionals by the chain plates, overlaps of cloth layers and internal framing, could be expected to increase the total weight by over 20%. So taking a 1lb/ft2 basis (less decks) painted with framing and bulkheads but no interior, would weight around 700-750 lbs.

It is necessary to be careful in not adding too much weight to the interior and the extra areas of reinforcement. The savings that can be made in reducing the hull laminates are not as significant or as cheap, as in care in bulkhead attachment, hull to deck joining, etc.

Panel stiffness is not usually a problem in a multihull for two reasons. Firstly the loadings are not high in terms of wave pressure as the slamming experienced by keelboats or planning craft, is not encountered. Secondly the boat tends to be framed by bunks, shelves and bulkheads etc. at close spacing. It would be possible to use 6mm thick core on a Micro-multihull except from a practical viewpoint. Construction would have to be over a full male mould or a female mould as the foam would lack stiffness over a plain batten and frame set up. 10 mm would be the preferred thickness unless the design called for a Spartan interior with only minimal framing, in which case 12mm could be considered.

With regard to density, the most probable material would be the standard marine usage of Divinycell H80 or Klegecell 075 (4.7 – 5 lb/ft2).

Lower density Divinycell H60 could be used with heavier laminates where the outside skin thickness is enough to provide a durable surface for impact and general abuse.

Durability is the major design criteria. It is possible to reduce weight/cost and maintain adequate stiffness and strength by using low density core H60 and thin, high strength skins.

However the rather poorly defined areas of impact resistance and general durability become a concern. Such a boat would be fine in the water as long as it didn't hit anything (floating logs, other boats) and would be at greatest risk alongside a wharf or when laubching and retrieving. For some owners this is acceptable but most require more security and will pay the price in weight.

There is no doubt that a sandwich laminate based on a relatively thick core (10 -12 mm)will provide a very stiff panel with regard to wave loadings. Other in plane loads such as from beam connections, chain plates and overall hull bending/twisting, are taken by the very thin skins. It is wise, therefore, to make use of unidirectional materials aligned with the direction of these secondary loads.

Foam sandwich is unlikely to be the lightest or cheapest medium. That honour will probably go to light plywood. It has the advantage of excellent panel stiffness, cleaner interior and with adequate laminates, good durability. However a 4mm plywood hull won't take much trailer knocking in surf launching conditions either. Cost will vary depending onrequirements of the owner but the simplest laminates are in the region of strip

planked cedar construction costs. The beauty of the method is that it can be tailored to a budget, a weight limit and designed around numerous secondary loads.

1. Cost effective example:
Paint
150 gm2 csm) 400/150
400 gm2 ulticloth) ultimate
300 gm2
---
12 m H60 Divinycell
---
300 gm2 csm
330 gm2 glass cloth
(polyester resin)
Plus extra 400 gm2 unidirectional on inside skin around chain plates, beams rtc.
Panel weight including paint 1,25 – 1,3 lb/ft2

2. Light weight example:
Paint
300 gm2 S glass cloth
300 gm2 Kevlar cloth
---
10 mm H80 Divinycell
---
160 gm2 Kevlar cloth
135 gm2 glass cloth
(epoxy resin)
Plus extra 240 gm2 unidirectional S glass in high load areas.
Panel weight including paint 0.8 – 0.85 lb./ft2

3. Compromise using unidirectional E glass:
Paint
288 gm2 unicloth at 45 degrees
288 gm2 unicloth at opposite 45 degrees
400 gm2 unicloth at 0 degrees
---
10 mm H80 Divinycell
---
400 gm2 unicloth at 0 degrees
320 gm2 plain cloth at 90 degrees
Plus extra 400 gm2 unidirectional cloth in high load areas
Panel weight including paint 1.1 – 1.15 lb./ft2

4. Ultra light: (danger)?
Paint – although not necessary
135 gm2 glass cloth
170 gm2 Kevlar cloth
---
6 mm H80 Divinycell
---
170 gm2 Kevlar
Extras in place where necessary
Panel weight including paint 0.5 lb./ft2

Fuller: Rounded decks like on a Great Barrier Express have also saved them in such conditions. When Richard Pilkington jammed his mainsheet and got hit by a gust he went up to 90 degrees and skidded along on the round deck. A sharp gunwhale or flat deck would have seen him go over.
Baigent: Okay, now have a look at this huge rigged Mitchell design. (next page)
Fuller: I personally don't believe that rig. It is too high an aspect ratio for the rule.
Young: What fools me is that I've drawn a rig of 480 sq. ft. and I thought that was pretty big but it still does not look anything like that.
Keogh: That headboard would have to be monstrous to handle the mainsail